COPYRIGHT © 1983 BY ATARI, INC. ALL RIGHTS RESERVED.

No part of this publication may be reproduced by any mechanical, photographic, or electronic process, or in the form of a phonographic recording, nor may it be stored in a retrieval system, transmitted, or otherwise copied for public or private use, without permission from ATARI, Inc.

Published By:
ATARI, INC.
1265 Borregas Avenue
P.O. Box 427
Sunnyvale, California 94086

CX 5200™ FIELD SERVICE MANUAL

ATARI®

A Warner Communications Company

FD100127
Rev 3
June 1983

ATARI

ADVANCED VIDEO ENTERTAINMENT SYSTEM

MODEL 5200™

FIELD SERVICE MANUAL

Atari believes that the information described in this manual is accurate and reliable, and much care has been taken in its preparation. However, no responsibility, financial or otherwise, shall be accepted for any consequences arising out of the use of this material. Information contained herein is subject to change. Revisions may be issued to advise of such changes and/or additions.

Correspondence regarding this document should be forwarded to Director of Technical Support, Consumer Product Service, Atari, Incorporated, 845 W. Maude, Sunnyvale, California 94086.

TABLE OF CONTENTS

Section	Title	Page
	INTRODUCTION	vii
1	THEORY OF OPERATION	1-1
	Overview	1-1
	Model 5200 Console	1-1
	Four-Port Universal PCB differences	1-1
	Two-Port Universal PCB differences	1-2
	Outer Case	1-3
	RF Shield	1-4
	PC Board	1-4
	Microprocessor Chip - MPU	1-4
	Alphanumeric Television Interface Controller (ANTIC)	1-5
	Graphic Television Interface Adaptor (GTIA)	1-6
	Pot Keyboard Integrated Circuit (POKEY)	1-6
	Switchbox	1-7
	Game Controller	1-8
2	SILKSCREENS AND SCHEMATICS	2-1
3	4-PORT MODEL 5200 TESTING	3-1
	Equipment Requirements	3-1
	Testing with the Diagnostic Cartridge (Version 1.1)	3-1
	Overview of Tests	3-1
	Initialization	3-1
	Power-up Screen	3-3
	Solid (Black) Colored Screen or Vertically Lined Screen	3-3
	Snowy Screen	3-4
	Warped-Ragged Picture	3-4
	Color Bar Test	3-4
	Gray Bar Test	3-5
	Any Video Screen	3-6
	Pokey Adjust	3-7
	Error Summary	3-8
	RAM Test	3-10
	Verify ROM	3-10
	Port Test	3-10
	Tone Test	3-10

Changed by
ECN #0036
6/21/83

TABLE OF CONTENTS (Continued)

Section	Title	Page
3A	2-PORT MODEL 5200 TESTING	3A-1
	Equipment Requirements	3A-1
	Testing with the Diagnostic Cartridge (Version 1.1)	3A-1
	Overview of Tests	3A-1
	Initialization	3A-1
	Power-Up Screen	3A-2
	Solid Colored (Black) Screen or Vertically Lined Screen	3A-3
	Snowy Screen	3A-3
	Warped-Ragged Picture	3A-3
	Color Bar Test	3A-4
	Gray Bar Test	3A-5
	Any Video Screen	3A-6
	Verify OS ROM	3A-7
	Tone Test	3A-7
	POKEY (Port) Test	3A-8
	RAM Test	3A-8
	POKEY Adjust Test	3A-9
	POKEY Softfire Test	3A-10
4	4-PORT 5200 DIAGNOSTIC FLOWCHART	4-1
	Overview	4-1
	The Swap-out Procedure	4-1
	Replace in Order	4-1
	ATARI Repair Hotline	4-1
4A	2-PORT 5200 DIAGNOSTIC FLOWCHART	4A-1
	Swapout Procedure	4A-1
	Replace In Order	4A-1
	ATARI Repair Hotline	4A-1
5	4-PORT 5200 SYMPTOM CHECKLIST	5-1
5A	2-PORT 5200 SYMPTOM CHECKLIST	5A-1
6	GAME CONTROLLERS	6-1
	Overview	6-1
	Joystick	6-2
	Key Pad	6-2
	Fire Buttons	6-2
	Select Buttons	6-2

TABLE OF CONTENTS

Section	Title	Page
	Controller Testing	6-3
	Controller Testing without a Model 5200 Console	6-5
	Failures	6-6
	POT Arm Alignment Procedure	6-8
	Controller Disassembly/Assembly	6-10
	CX52 Game Controller Schematic	6-13
7	CX53 Trakball	7-1
8	PARTS LIST	8-1
9	SERVICE BULLETINS	9-1

LIST OF ILLUSTRATIONS

Figure	Title	Page
1-1	Model 5200 Console	1-2
1-2	Channel 2-3 Switch and Future Development Access	1-3
1-3	MPU Pin Assignments	1-4
1-4	ANTIC Pin Assignments	1-5
1-5	GTIA Pin Assignments	1-6
1-6	POKEY Pin Assignments	1-7
2-1	5200 Motherboard	2-3
2-2A	5200 Motherboard Schematic (A)	2-4
2-2B	5200 Motherboard Schematic (B)	2-4A
2-2C	5200 Motherboard Schematic (C)	2-4B
2-3	4-Port Silkscreen	2-5
2-4	4-Port Schematic (1 of 4)	2-7
2-4	4-Port Schematic (2 of 4)	2-9
2-4	4-Port Schematic (3 of 4)	2-11
2-4	4-Port Schematic (4 of 4)	2-13
2-5	Trakball Silkscreen	2-15
2-6	Trakball Keypad Schematic	2-15
2-7	Trakball Schematic	2-17
2-8	5200 2-Port Schematic (1 of 5)	2-19
2-9	5200 2-Port Schematic (2 of 5)	2-21
2-10	5200 2-Port Schematic (3 of 5)	2-23
2-11	5200 2-Port Schematic (4 of 5)	2-25
2-12	5200 2-Port Schematic (5 of 5)	2-27
2-13	5200 2-Port Silkscreen	2-29

TABLE OF CONTENTS

LIST OF ILLUSTRATIONS

Figure	Title	Page
3-1	Color Bars Screen	3-5
3-2	Gray Bar Screen	3-6
3-3	Any Video Screen	3-7
3-4	Pokey Adjust Test Screen	3-8
3-5	Error Summary	3-8
3A-1	Color Bars Screen	3A-4
3A-2	Gray Bar Screen	3A-5
3A-3	Any Video Test Screen	3A-6
3A-4	RAM Test Screen	3A-9
3A-5	POKEY Adjust Test Screen	3A-9
6-1	CX52 Game Controller	6-1
6-2	Joystick Positions 1 & 2	6-3
6-3	Cable Connector Pins (End View)	6-6
6-4	Pot & Arm Assembly	6-8
6-5	Controller Top (Underside)	6-9
6-6	Select Switch Bezel Removal	6-10
6-7	Controller Knob Removal	6-11
6-8	Pot Arm Positions for Assembly	6-11
6-9	CX52 Game Controller Schematic	6-13
7-1	Top Cover Assembly	7-2
7-2	Bottom Cover Assembly	7-3
7-3	Trakball Block Diagram	7-6
7-4	Diagonal or Circular Motion	7-8
7-5	Cue Ball Support	7-27
7-6	Top Cover (Underside)	7-28
7-7	Main PC Board	7-29

LIST OF TABLES

Table	Title	Page
3-1	Diagnostic Error Codes	3-9
6-1	Game Controller Continuity Check	6-7
7-1	Keyboard Test Display	7-7

INTRODUCTION

The Atari Advanced Video Entertainment System (Model 5200) Field Service Manual is a reference guide for you, the service technician.

This Field Service Manual is organized in twelve sections:

- **THEORY OF OPERATION** - Overview of how the Model 5200 works and what its basic assemblies look like.
- **SILKSCREENS AND SCHEMATICS** - Electrical drawings and layouts of all of the Model 5200 printed circuit boards.
- **4-PORT 5200 TESTING** - Review of Diagnostic Tests available for diagnosing 4-Port Model 5200 problems.
- **2-PORT 5200 TESTING** - Review of Diagnostic Tests available for diagnosing 2-Port Model 5200 problems.
- **4-PORT 5200 DIAGNOSTIC FLOWCHART** - Aids for troubleshooting the 4-Port Model 5200.
- **2-PORT 5200 DIAGNOSTIC FLOWCHART** - Aids for troubleshooting the 2-Port Model 5200.
- **4-PORT 5200 SYMPTOM CHECKLIST** - Failure information to assist the experienced technician arrive at a rapid diagnosis of 4-Port Model 5200 problems.
- **2-PORT 5200 SYMPTOM CHECKLIST** - Failure information to assist the experienced technician arrive at a rapid diagnosis of 2-Port Model 5200 problems.
- **GAME CONTROLLERS** - Overview of hand controller construction with electrical schematics and recommended test and repair procedures.
- **TRAKBALL CONTROLLER** - Overview of trakball construction with electrical schematics and recommended test and repair procedures.
- **PARTS LIST** - Detailed breakdown of all parts used in the 4-Port and 2-Port models.
- **SERVICE BULLETINS** - Section to be used to hold Field Change Orders, Upgrade Bulletins and Tech Tips.

This manual is designed for use by both the experienced and inexperienced service technician. The Diagnostic Flowcharts (Sections 4 and 4A) provide detailed procedures for technicians not completely familiar with the 5200 models. The Symptom Checklists (Sections 5 and 5A) provide a rapid reference for the more experienced technician.

SECTION 1

THEORY OF OPERATION

Overview

The ATARI Advanced Video Entertainment System (Model 5200) is an advanced microcomputer. It receives input from the game controllers, Read-Only-Memory (ROM) cartridges and other peripherals, and displays this input on a T.V. screen. A maximum of four players may play at one time.

The Model 5200 is composed of the console, switchbox and game controllers. The following paragraphs provide a general discussion of each of these items and their component parts. For a detailed discussion of the Game Controller see SECTION 6.

Model 5200 CONSOLE

The Model 5200 console is composed of an outer plastic case which houses the PC board and its RF Shield. Figure 1-1 shows the console and its parts.

There are currently three different PC Boards being used in Model 5200 consoles. Some models contain the original 4-port PC Board, number CA018087. Other consoles contain a 4-port universal PC Board, number CA020108. A third PC Board with only two player ports, number CA021374, is also available. Unless otherwise specified, the references in this manual pertain to the original 4-port PCB, number CA018087. The specific differences of the 4-port universal PCB and the 2-port universal PCB are called out below.

Four-Port Universal PCB differences:

External

The ATARI serial number on the bottom of the unit will have a + as its third designator. For example:

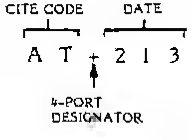

Internal

1) The chip designators have been changed. All chips are designated A instead of U.

2) Two 74LS244 ICs (U4 and U15) were removed from the PC Board.

3) Two 74LS244 ICs (U14 and U28) were replaced with a 74LS125 (A14) and a 74LS51 (A15).

4) Provisional circuitry for future expansion has been added in order to accommodate the VCS™ cartridge adaptor.

Changed by
ECN #0036
6/21/83

Two-Port Universal PCB differences:

1) All of the 4-port universal board differences listed above are included on the 2-port universal PCB.
2) Ports 3 and 4 and their associated discrete components have been removed.
3) ICs A12 and A13 have been removed.
4) The automatic switchbox has been replaced with a manual switchbox and the RF cable has been replaced with the standard RF cable.
5) The power adaptor plugs directly into the rear of the console instead of plugging into the switchbox.

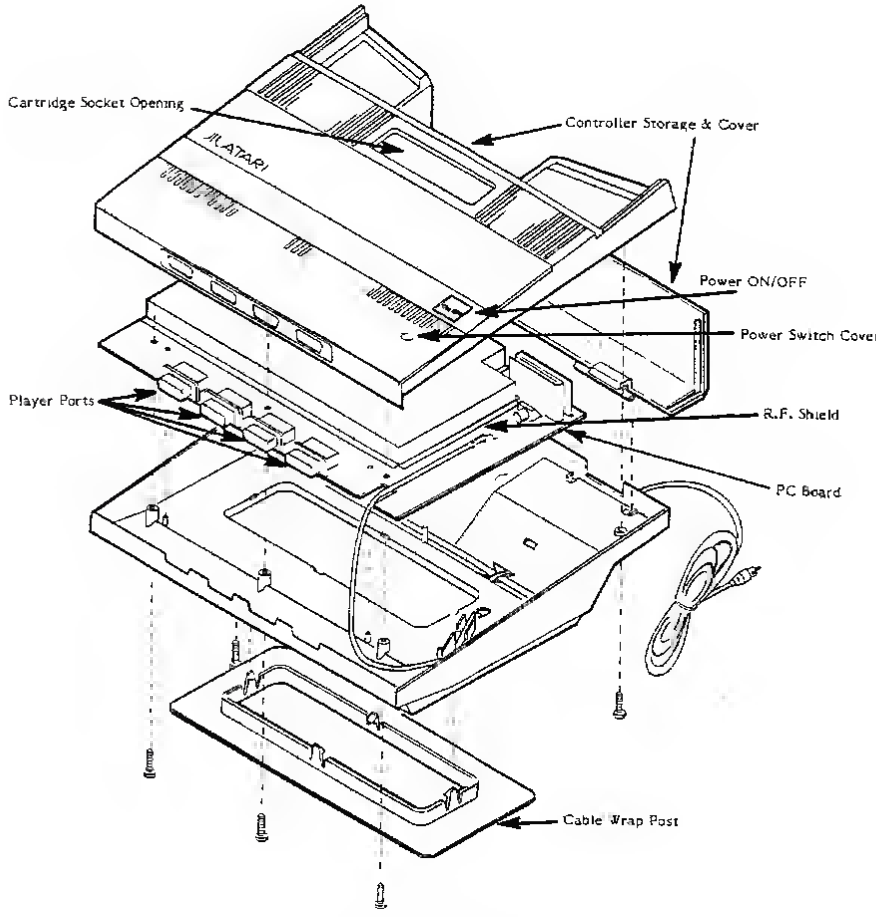

Figure 1-1. Model 5200 Console (4-PORT)

Outer Case

The outer case consists of a bottom and a top plastic cover which are held together by five Phillips-head screws.

At the rear of the bottom plastic cover (Figure 1-2) is:

a) an opening for access to the channel 2-3 switch

b) a removable door which allows access for future development.

In the base is a cable wrap post for RF cable storage.

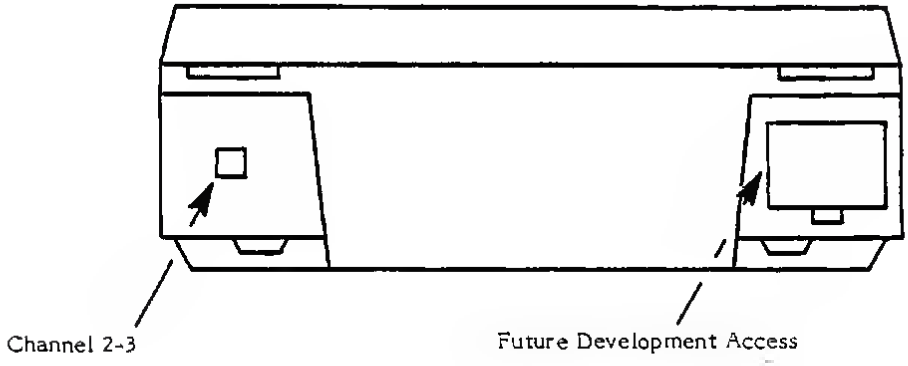

Figure 1-2. Channel 2-3 Switch and Future Development Access

The top plastic cover provides:

1) openings at the front for the four player ports

2) the power switch cover

3) the power ON/OFF switch

4) a storage area at the rear for two game controllers. The hinged cover for this area comes off as a separate piece when the top cover is disassembled.

RF Shield

An aluminum shield covers the PC Board and prevents the PC Board from generating interference on the T.V. screen.

PC Board

The console you are servicing may contain either the original PC Board Number CA018087 or the newer PC Boards Numbers CA020108 or CA021374. See Page 1-1 of this manual for an explanation of the three board's differences.

The PC Board consists of:

- 28 Integrated Circuit Chips on PC Board Number CA018087; 26 Integrated Circuit Chips on PC Board Number CA020108; 24 Integrated Circuit Chips on PC Board Number CA021374.
- a cartridge socket
- an RF module
- various discrete components

The major chips on the PC Board are:

Microprocessor Chip - MPU

The microprocessor (MPU) is the brain of the 5200. It makes the major decisions based on information from the ROM cartridge and the Random Access Memory.

Figure 1-3 shows the pin assignments for the MPU.

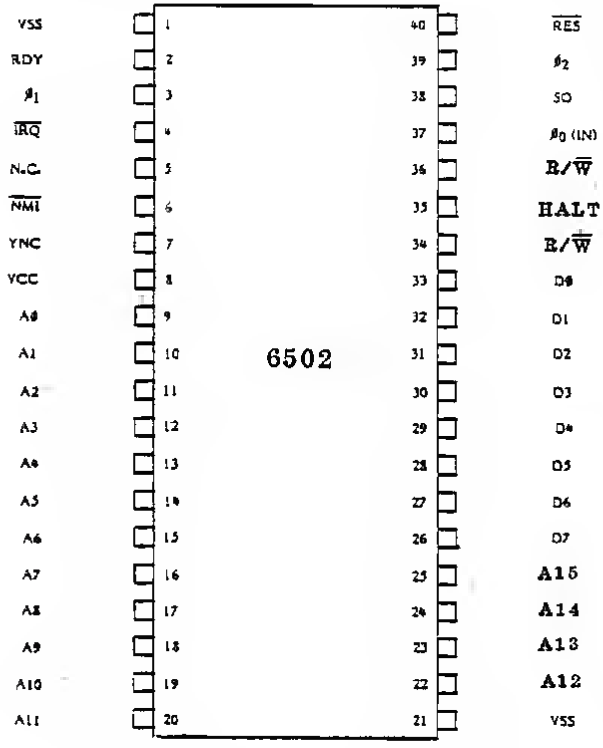

Figure 1-3. MPU Pin Assignments

Alphanumeric Televison Interface Controller (ANTIC)

The primary function of the Alphanumeric Television Interface Controller (ANTIC) chip is to get data from memory, independent of the processor, for display on the video screen.

Figure 1-4 shows the pin assignments for the ANTIC.

GROUND	VSS	1	40	D4	Data Bus
GTIA DATA	AN$\emptyset$	2	39	D5	Data Bus
GTIA DATA	AN1	3	38	D6	Data Bus
Light Pen	$\overline{LP}$	4	37	D7	Data Bus
GTIA DATA	$\overline{AN2}$	5	36	$\overline{RES}$	Reset
Not Connected	$\overline{RNMI}$	6	35	FPh$\emptyset$	Fast Phase 0 Clock
Interrupt Output	$\overline{NMI}$	7	34	Ph$\emptyset$	Phase 0 Clock
Refresh	$\overline{REF}$	8	33	D3	Data Bus
HALT	$\overline{HALT}$	9	32	D2	Data Bus
Address Bus	A3	10	31	D1	Data Bus
Address Bus	A2	11	30	D$\emptyset$	Data Bus
Address Bus	A1	12	29	Ph2	Phase 2 Clock
Address Bus	A$\emptyset$	13	28	A4	Address Bus
Read/Write	R/W	14	27	A5	Address Bus
Ready	RDY	15	26	A6	Address Bus
Address Bus	A10	16	25	A7	Address Bus
Address Bus	A12	17	24	A8	Address Bus
Address Bus	A13	18	23	A9	Address Bus
Address Bus	A14	19	22	A11	Address Bus
Address Bus	A15	20	21	**VCC**	5V Power

ANTIC

Figure 1-4. ANTIC Pin Assignments

Graphic Television Interface Adaptor (GTIA)

The Graphic Televison Interface Adaptor (GTIA) chip retrieves graphics data from memory via the ANTIC DMA process. This data is routed to the GTIA graphics registers. Figure 1-5 shows the pin assignments for the GTIA.

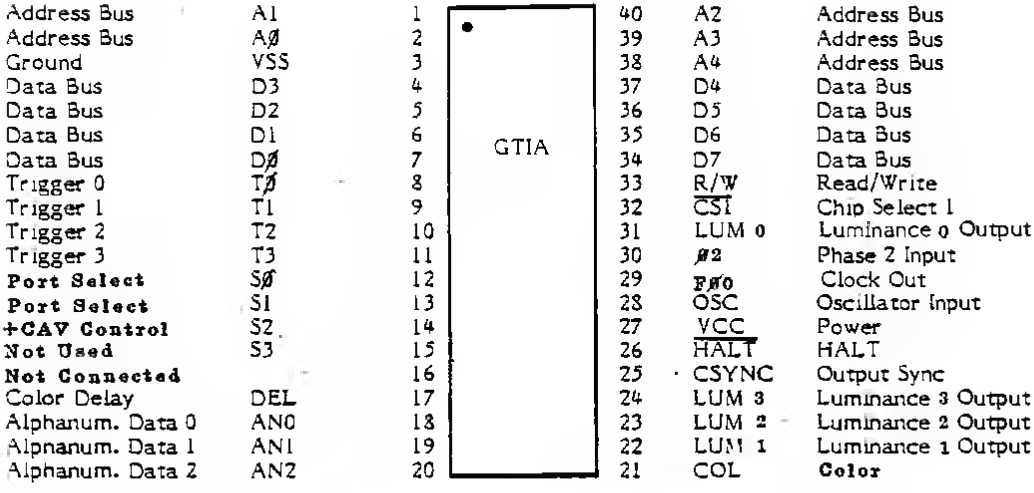

Figure 1-5. GTIA Pin Assignments

POT Keyboard Integrated Circuit (POKEY)

The Pot Keyboard Integrated Circuit (POKEY) chip provides the interface between the game ports and the microprocessor. It also contains four semi-independent audio channels, each with its own frequency, noise, and volume control. Figure 1-6 shows the pin assignments of the POKEY.

Ground	VSS	1	40	D2	Data Bus
Data Bus	D3	2	39	D1	Data Bus
Data Bus	D4	3	38	D0	Data Bus
Data Bus	D5	4	37	AUDIO	Audio Out
Data Bus	D6	5	36	A0	Address Bus
Data Bus	D7	6	35	A1	Address Bus
Phase 2 Clock	Ø2	7	34	A2	Address Bus
Pot Scan	P6	8	33	A3	Address Bus
Pot Scan	P7	9	32	R/W	Read/Write Control
Pot Scan	P4	10	31	CS1	Chip Select
Pot Scan	P5	11	30	$\overline{CS0}$	Chip Select
Pot Scan	P2	12	29	$\overline{IRQ}$	Interrupt Request
Pot Scan	P3	13	28	SOD	Serial Output Data
Pot Scan	P0	14	27	OCLK	Serial Output Clock
Pot Scan	P1	15	26	BCLK	Bidirectional Clock
Softfire	$\overline{KR2}$	16	25	$\overline{KR1}$	**Keyboard Read**
5 V Power	**VCC**	17	24	SID	Serial Input Data
Not Connected	$\overline{K5}$	18	23	$\overline{K0}$	**Not Connected**
Keyboard Scan	$\overline{K4}$	19	22	$\overline{K1}$	Keyboard Scan
Keyboard Scan	$\overline{K3}$	20	21	$\overline{K2}$	Keyboard Scan

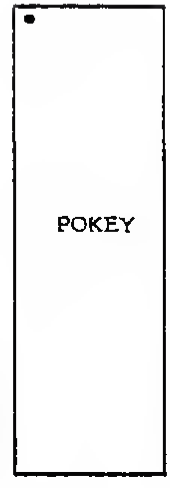

Figure 1-6. POKEY Pin Assignments

SWITCHBOX

A switchbox is connected and mounted to the back of the television set. The switchbox that is used with the 4-Port Models is different from other switchboxes manufactured by Atari and from the 2-Port Model 5200. These differences include:

1) power for the Model 5200 supplied through the switchbox

2) two Select Switch functions. The two functions are:

   NORMAL - Allows the Model 5200 to automatically switch between the television and the game when the Model 5200 ON/OFF switch is pressed.

   STANDBY - Enables television viewing while the Model 5200 is turned on.

Changed by
ECN #0036
6/21/83

GAME CONTROLLER

The game controller supplied with the Model 5200 is composed of an analog joystick, a 12-key Keypad, two separate Fire Buttons on each side, and three Select Buttons. The game controller is discussed in detail in Section 6.

SUMMARY

The Model 5200 is an advanced microcomputer which receives input from the Game Controllers, Read-Only-Memory (ROM) cartridges, and other peripherals. The console PC Board is housed within an outer case and contains four major chips which allow for interaction between the game and the player. They are: the Microprocessor (MPU), the Alphanumeric Television Interface Controller (ANTIC), the Graphic Television Interface Adaptor (GTIA), and the POT Keyboard Integrated Circuit (POKEY).

The console, switchbox, and Game Controllers make up the Model 5200 System which is addressed in the remainder of this manual.

SECTION 2

SILKSCREENS AND SCHEMATICS

On the following pages are representative silkscreens and schematics for the Model 5200. Minor variations in design may be encountered depending on the production date of the unit, but these schematics provide all details required for an in-depth understanding of all Model 5200 units.

Make pen and ink corrections to schematics on pages 2-4 and 2-4B as directed below.

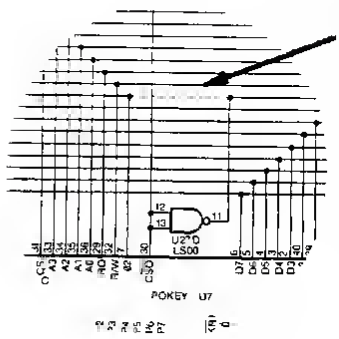

Page 2-4
Remove connector line shown as dotted line.

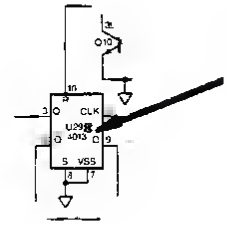

Page 2-4B
Change U298 to U29B.

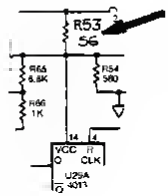

Page 2-4B
Add R53
56

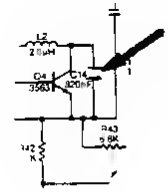

Page 2-4B
Add capacitor symbol on C14.

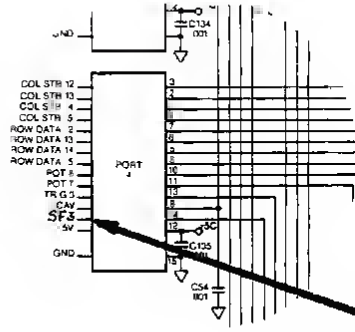

Page 2-4B
Add SF3 between +CAV and +5V on Port 4.

ATARI 5200 SUPER GAME

5200 Motherboard Silkscreen
Figure 2-1

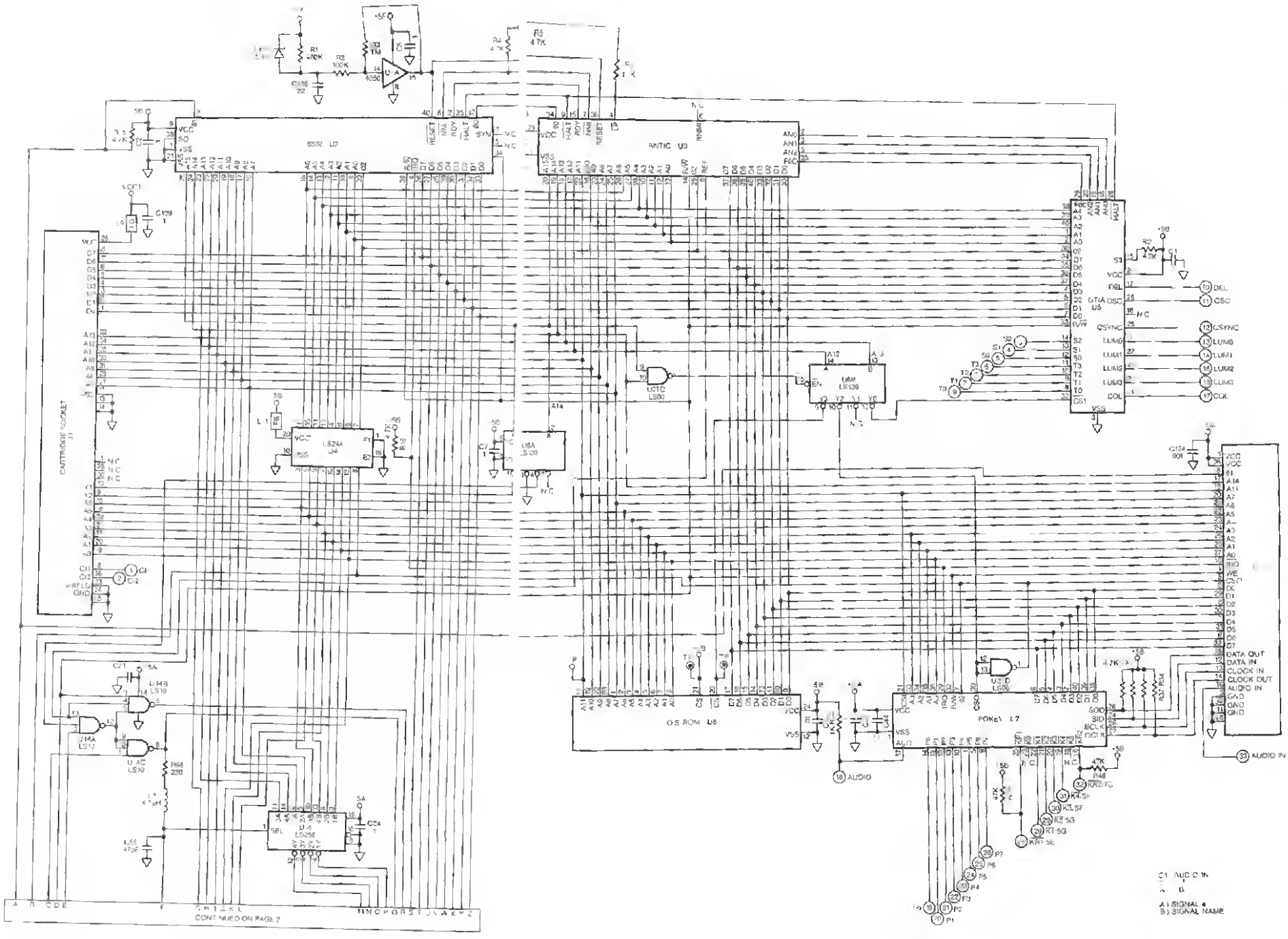

ATARI 5200 Super Game

5200 Motherboard Schematic (A)

Figure 2-2A

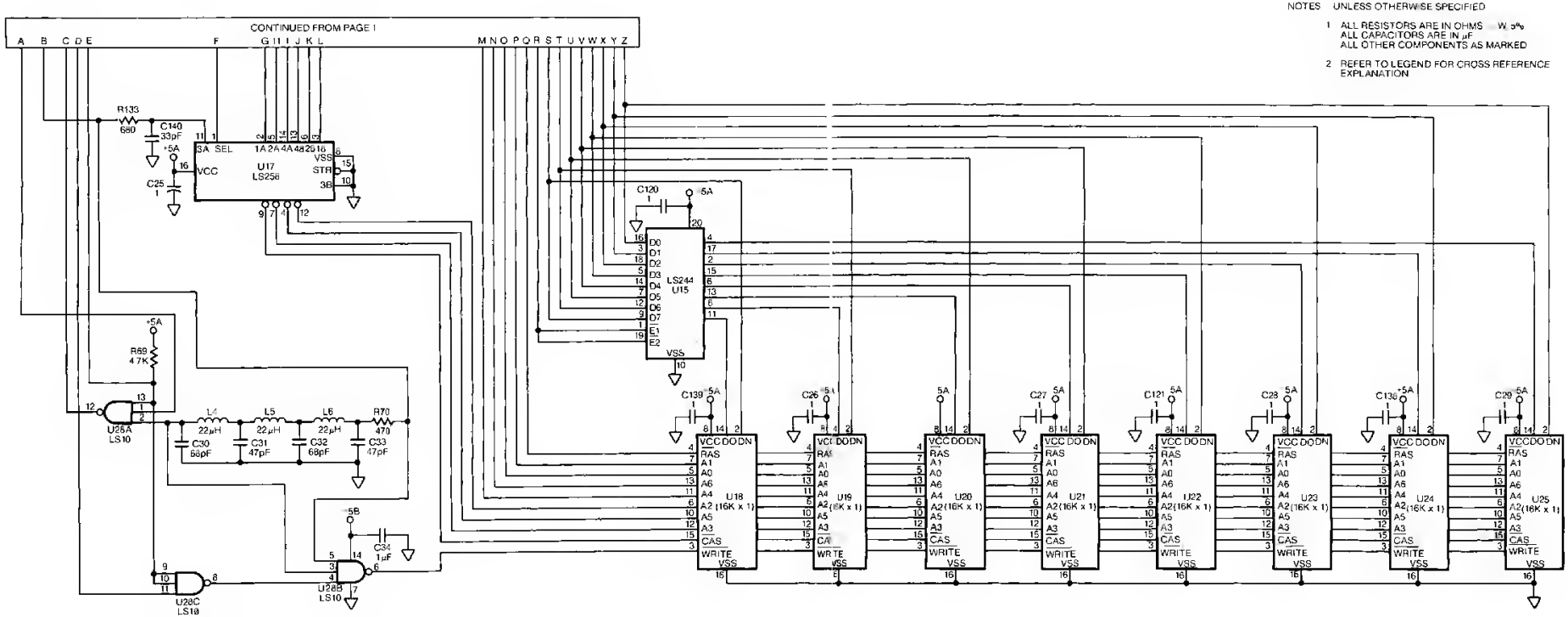
NOTES UNLESS OTHERWISE SPECIFIED
1 ALL RESISTORS ARE IN OHMS W 5%
ALL CAPACITORS ARE IN µF
ALL OTHER COMPONENTS AS MARKED
2 REFER TO LEGEND FOR CROSS REFERENCE EXPLANATION
CONTINUED FROM PAGE 1
A B C D E F G H I J K L M N O P Q R S T U V W X Y Z
R133 680
C140 33pF
C25 1
U17 LS258
SA SEL 1A 2A 4A 4B 2B 1B
VCC VSS STR 3B
C120 .1
U15 LS244
D0 D1 D2 D3 D4 D5 D6 D7 E1 E2 VSS
R69 4.7K
U28A LS10
L4 22µH
L5 22µH
L6 22µH
R70 470
C30 68pF
C31 47pF
C32 68pF
C33 47pF
C34 1µF
U28C LS10
U28B LS10
C139 .1
C26 .1
C27 .1
C121 .1
C28 .1
C136 .1
C29 .1
U18 U19 U20 U21 U22 U23 U24 U25
VCC DO DI DN RAS A1 A0 A6 A4 A2 (16K x 1) A5 A3 CAS WRITE VSS

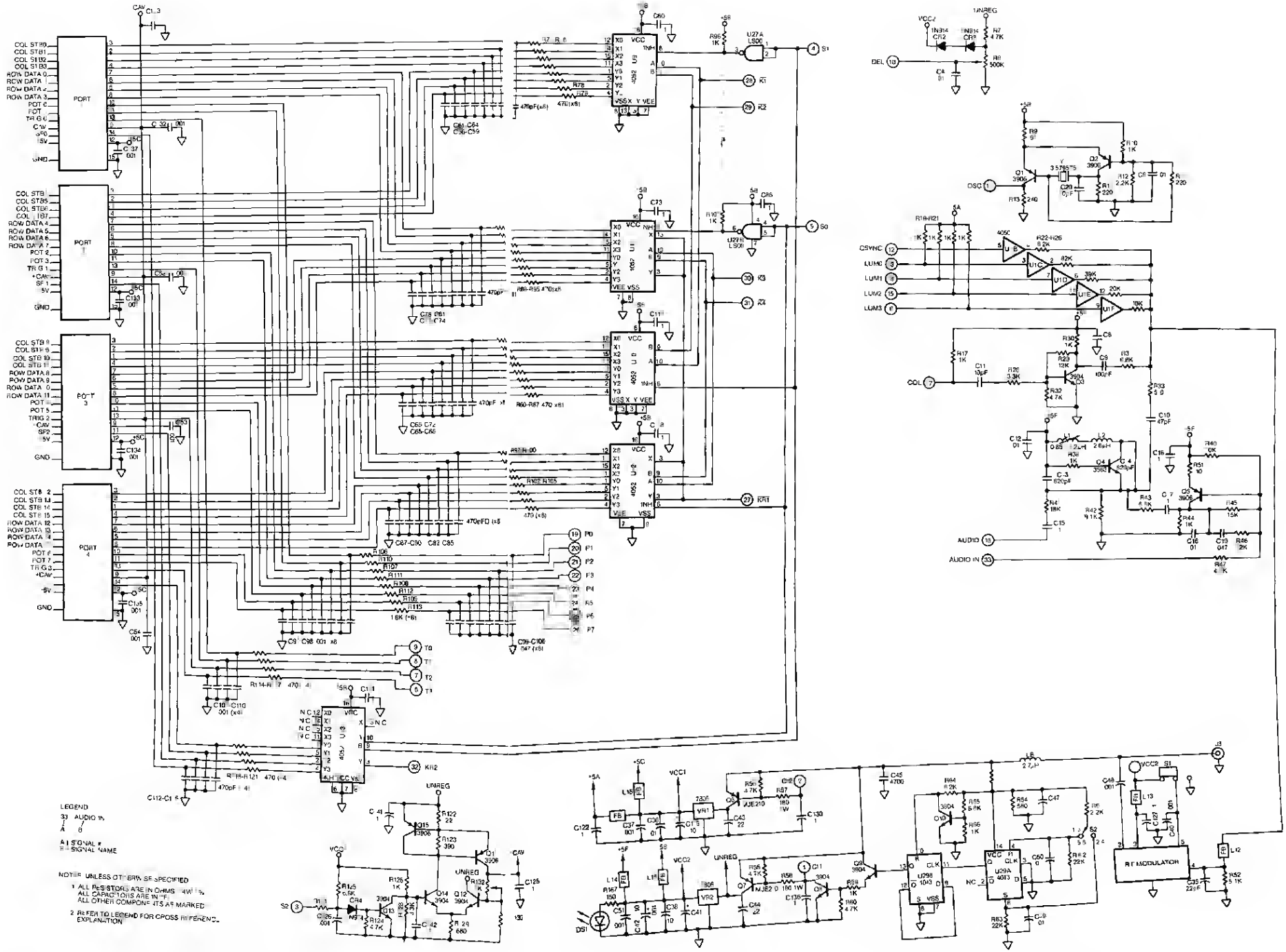

5200 Motherboard Schematic (C)

Figure 2-2C

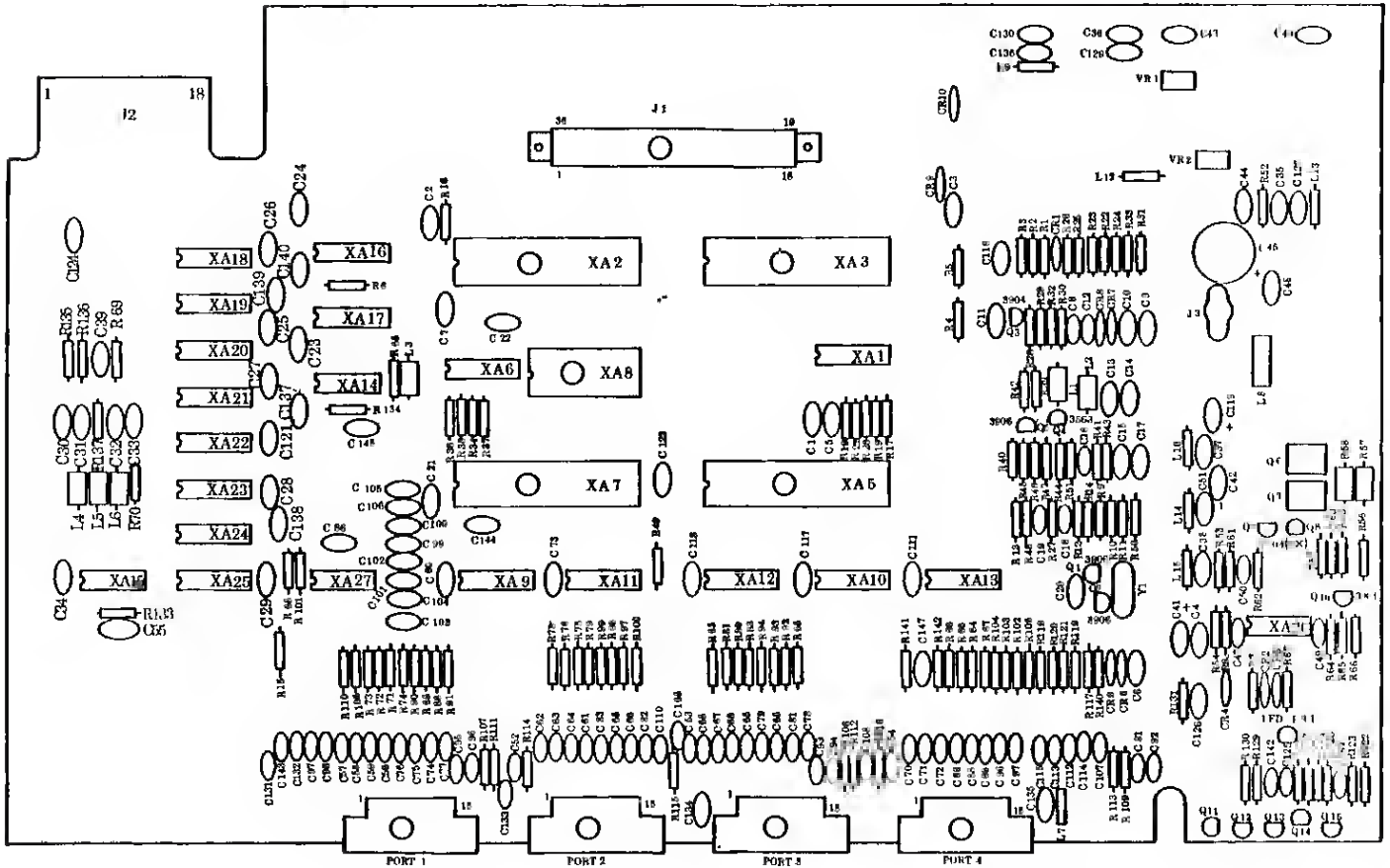

Figure 2-3. 4-Port Silkscreen

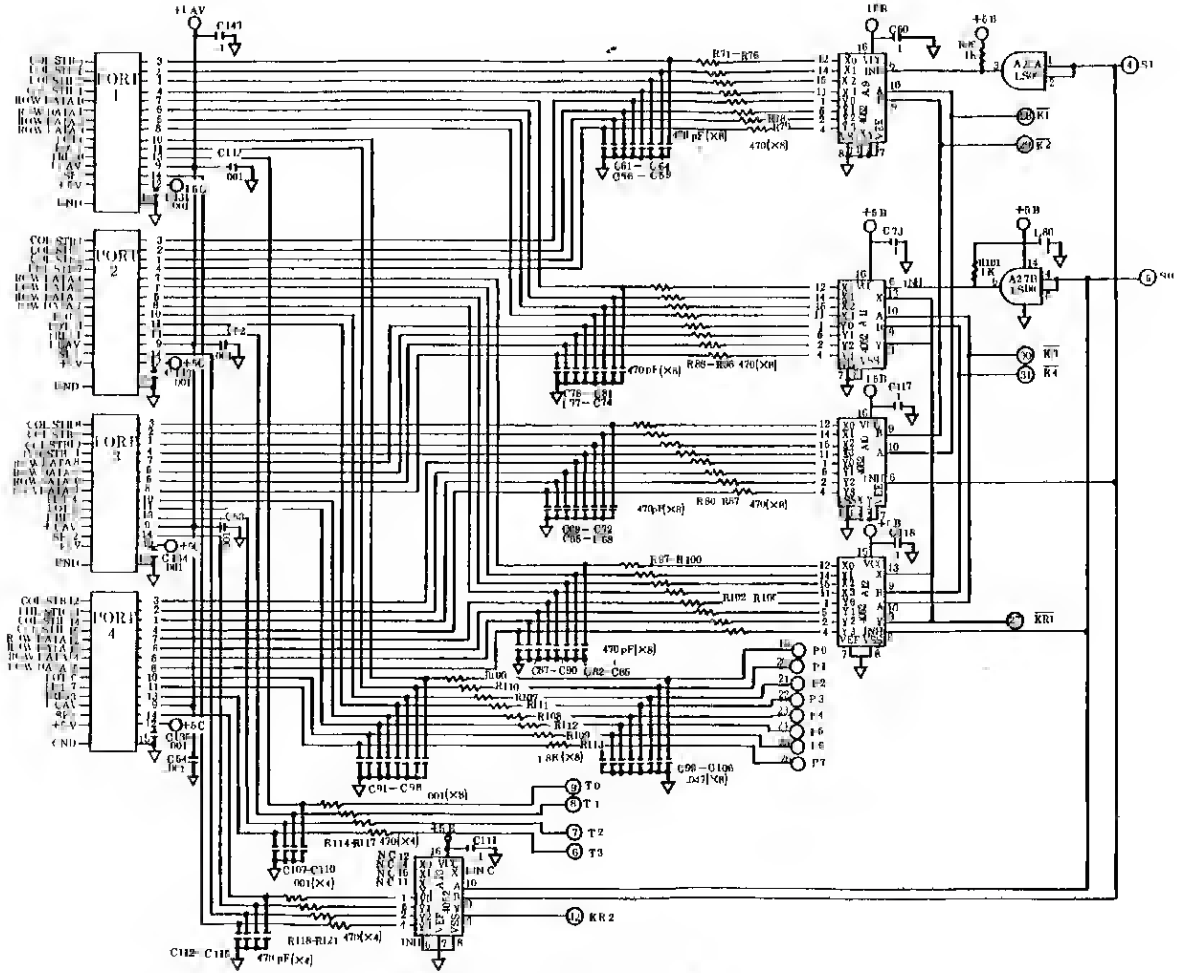

Figure 2-4. 4-Port Schematic
1 of 4

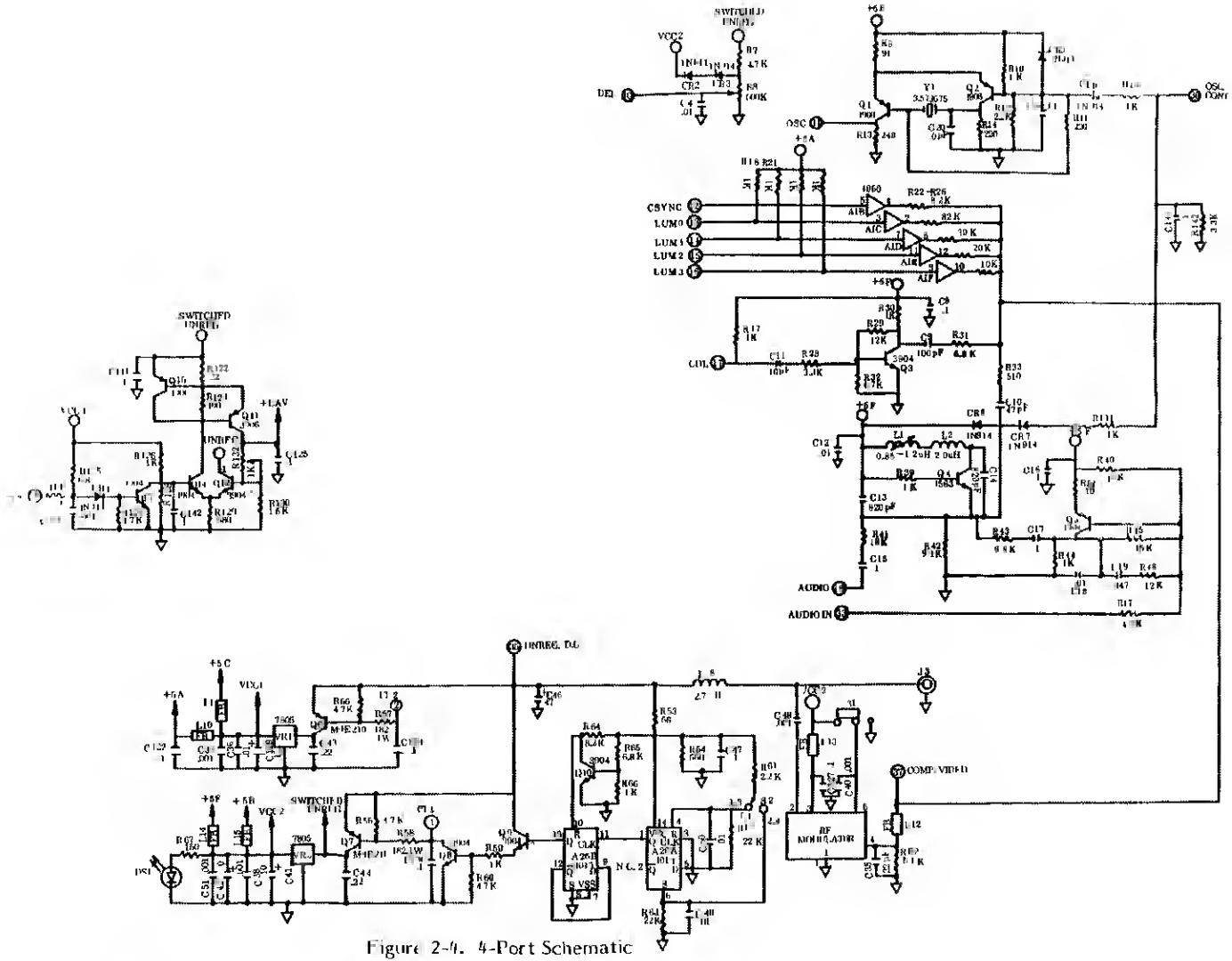

Figure 2-4. 4-Port Schematic
2 of 4

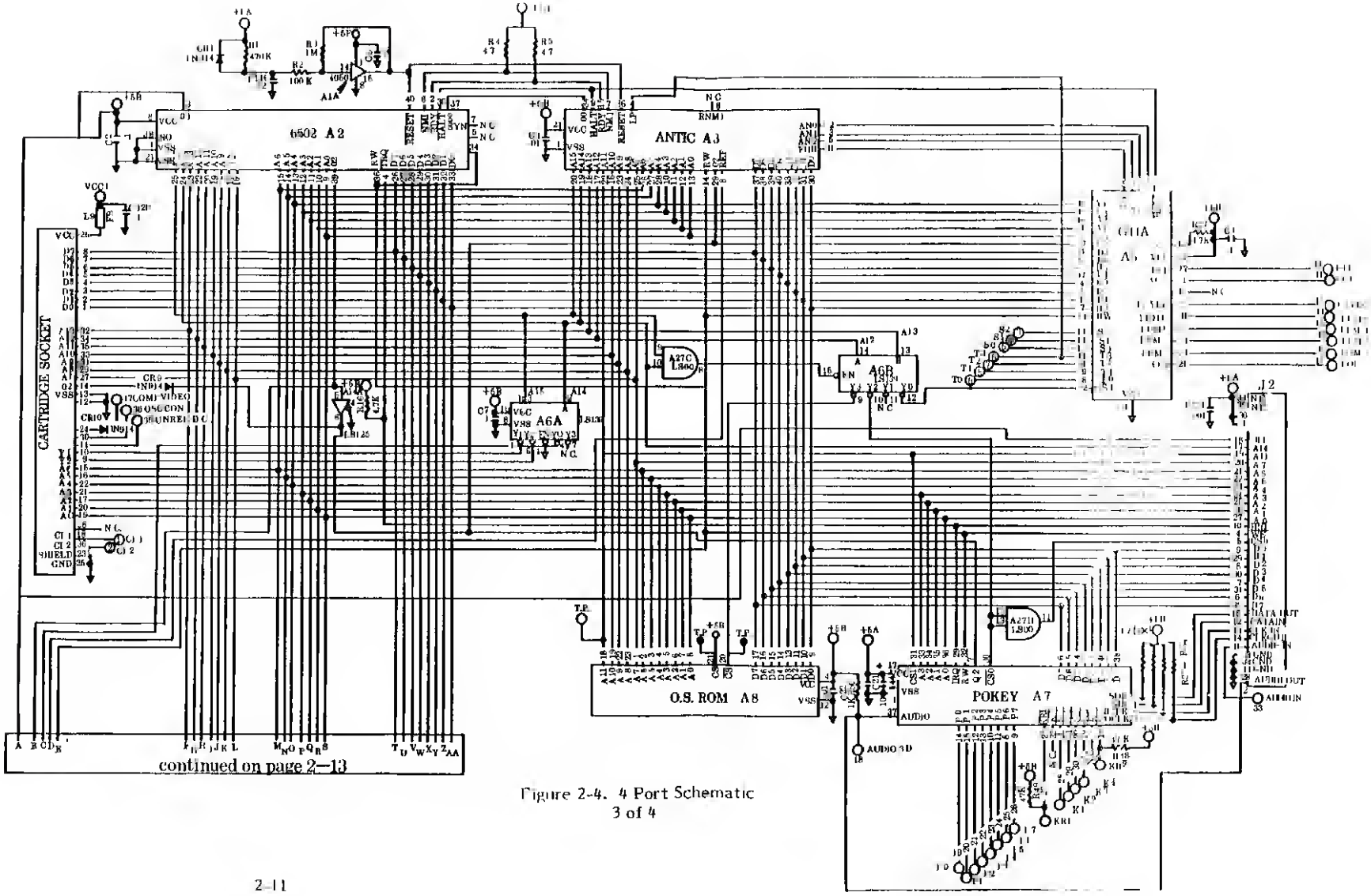

Figure 2-4. 4 Port Schematic
3 of 4

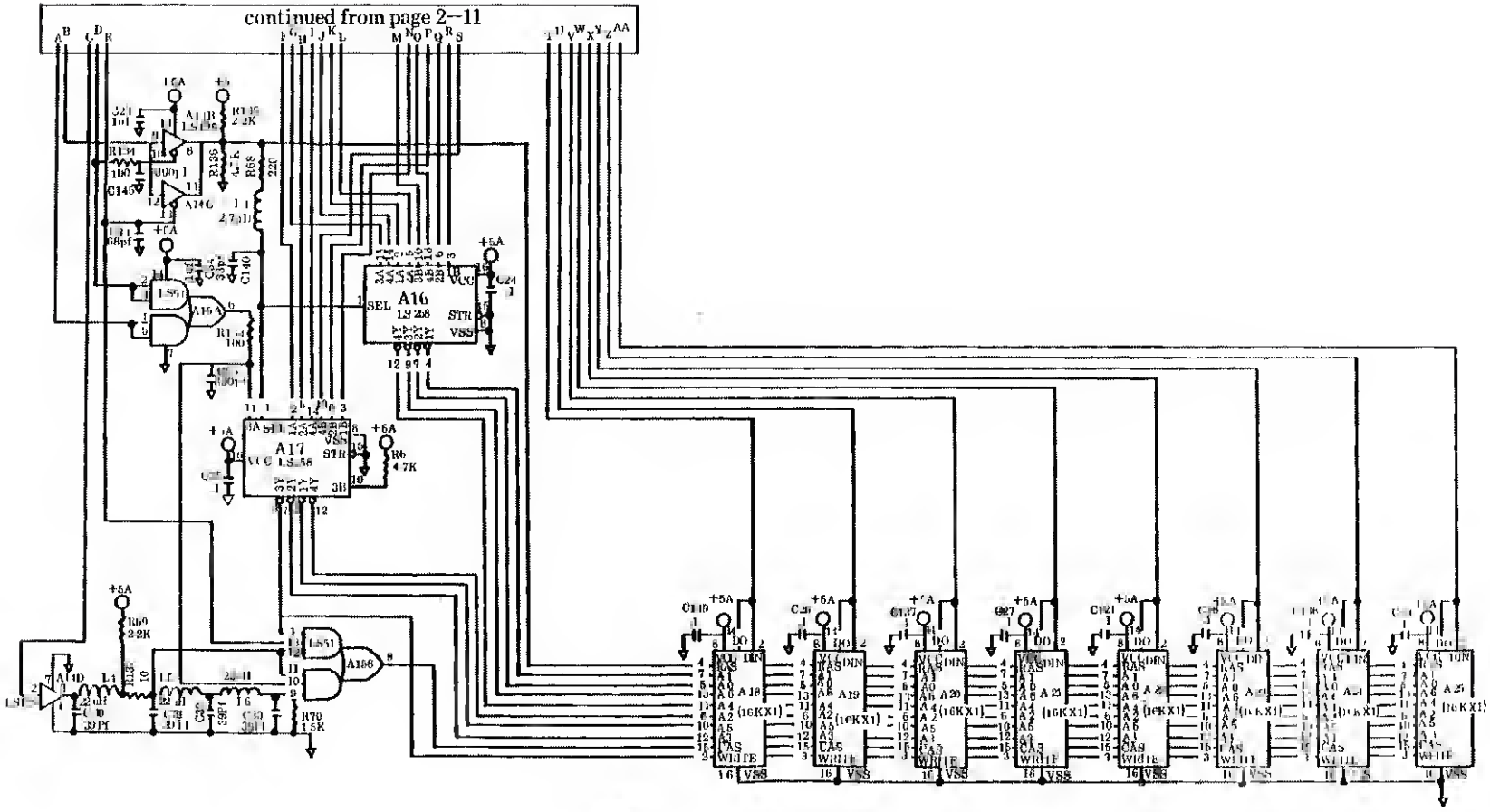

Figure 2-4. 4 Port Schematic
4 of 4

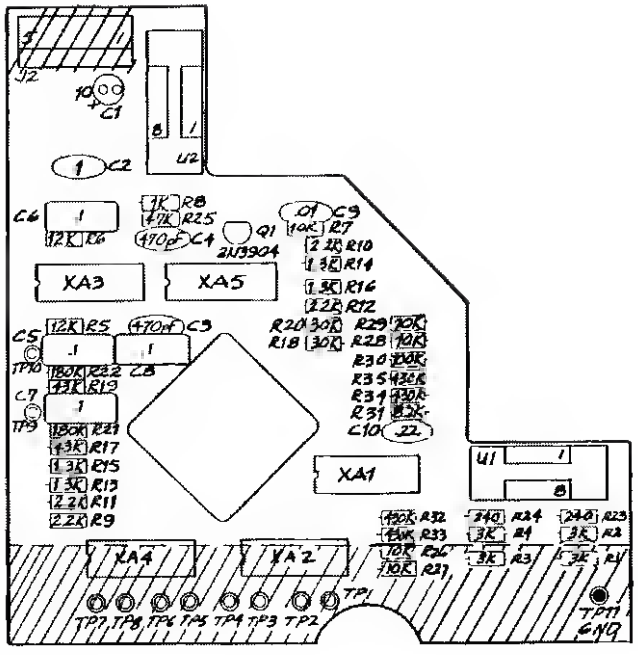

Note: If sockets or components are replaced, trim leads in shaded areas as close to PC Board as possible.

Figure 2-5. Trakball Silkscreen

15 pin cable — game connector

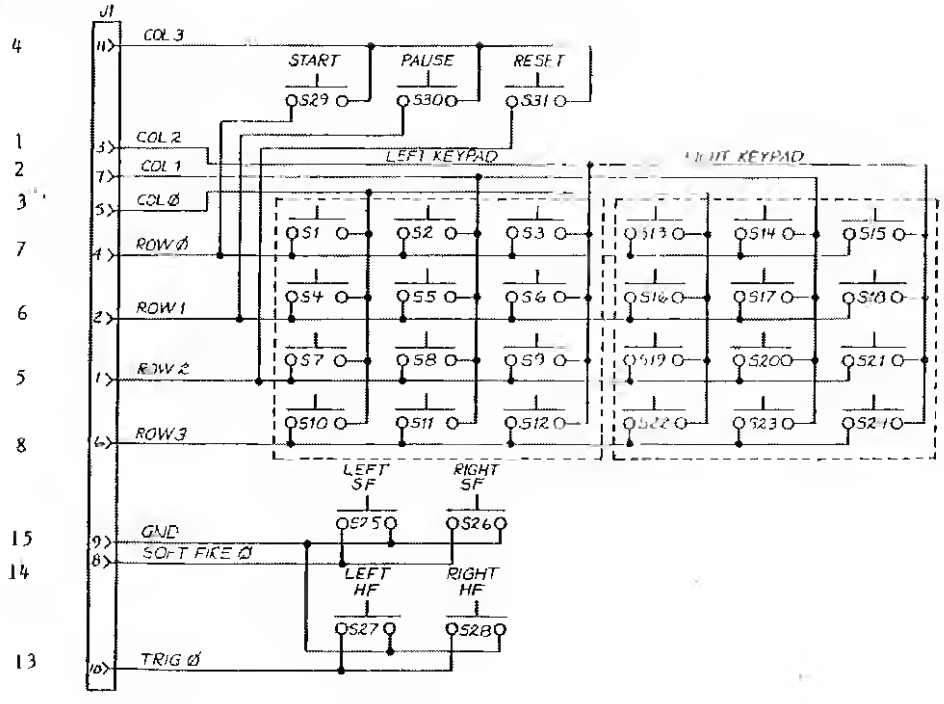

Figure 2-6. Keypad Schematic

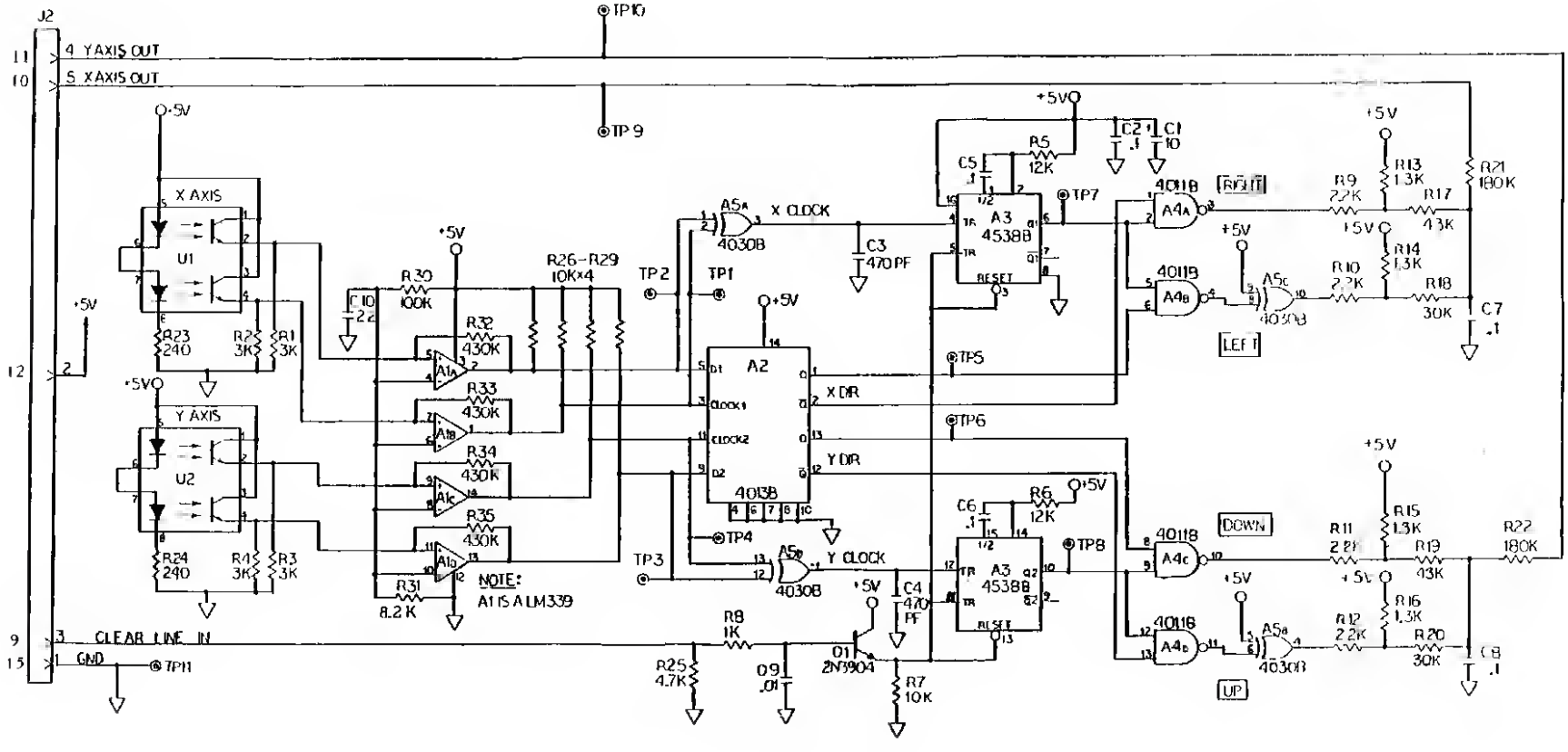

Figure 2-7. Trakball Schematic

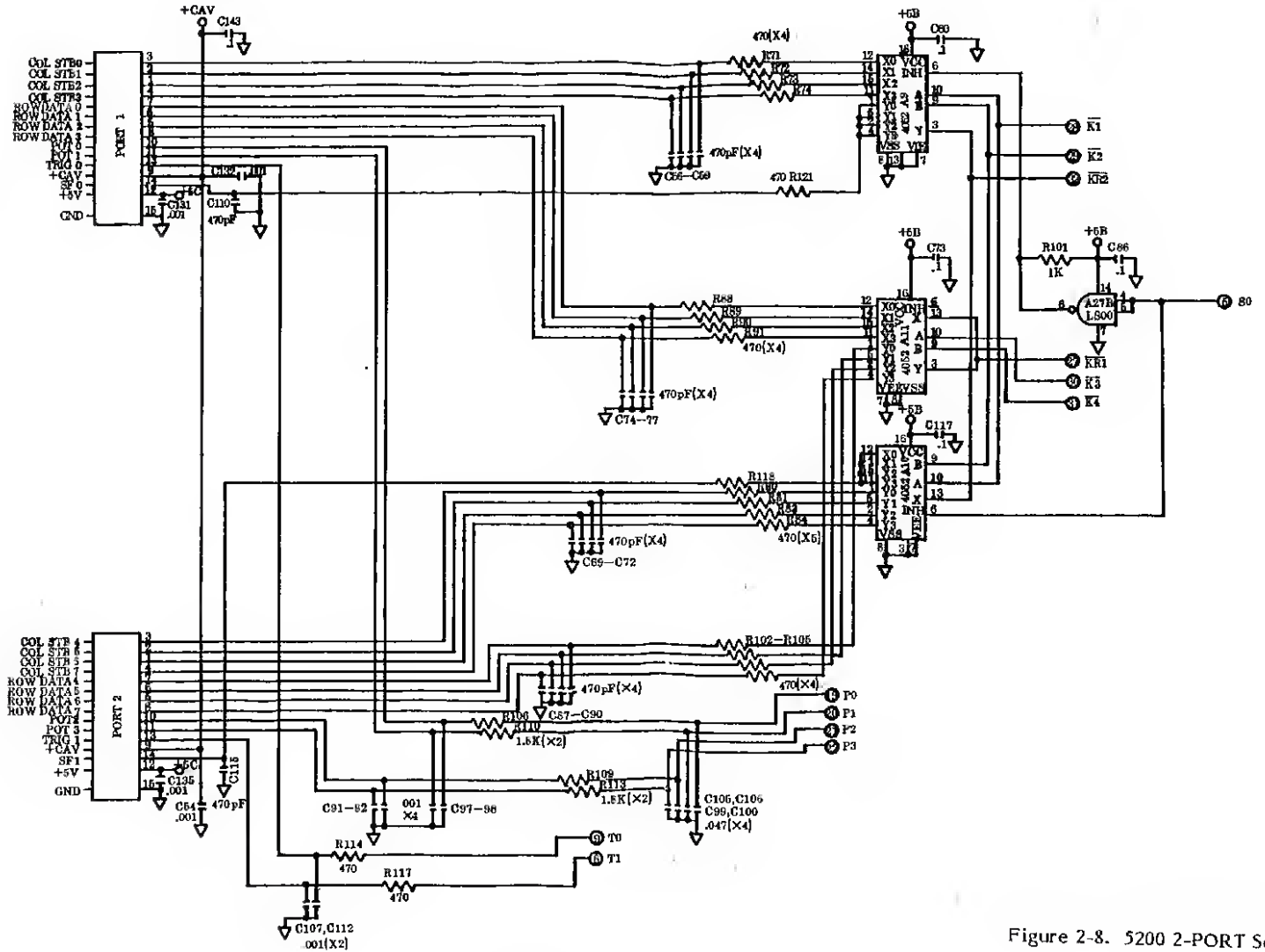

Figure 2-8. 5200 2-PORT Schematic
1 of 5

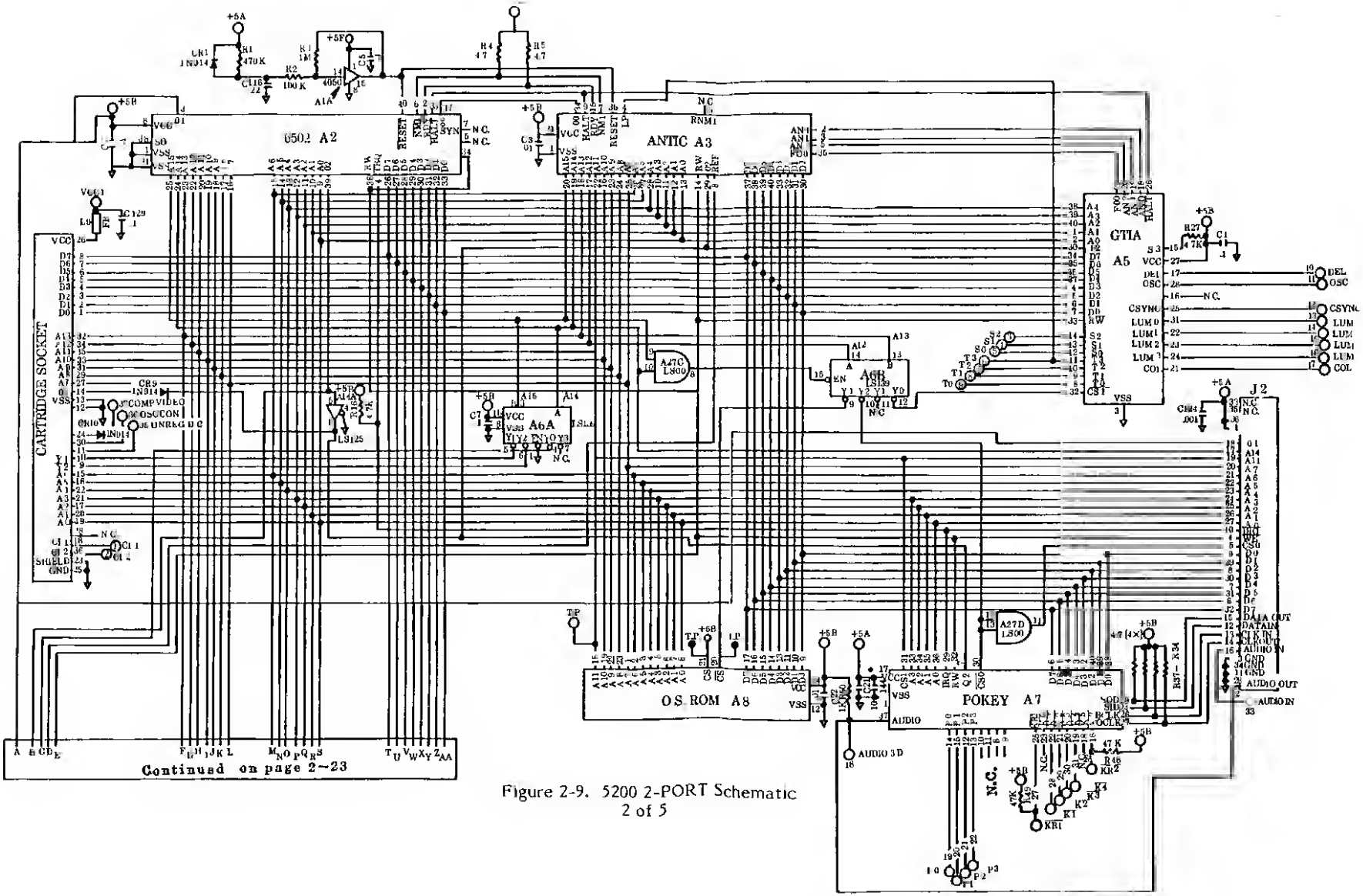

Figure 2-9. 5200 2-PORT Schematic
2 of 5

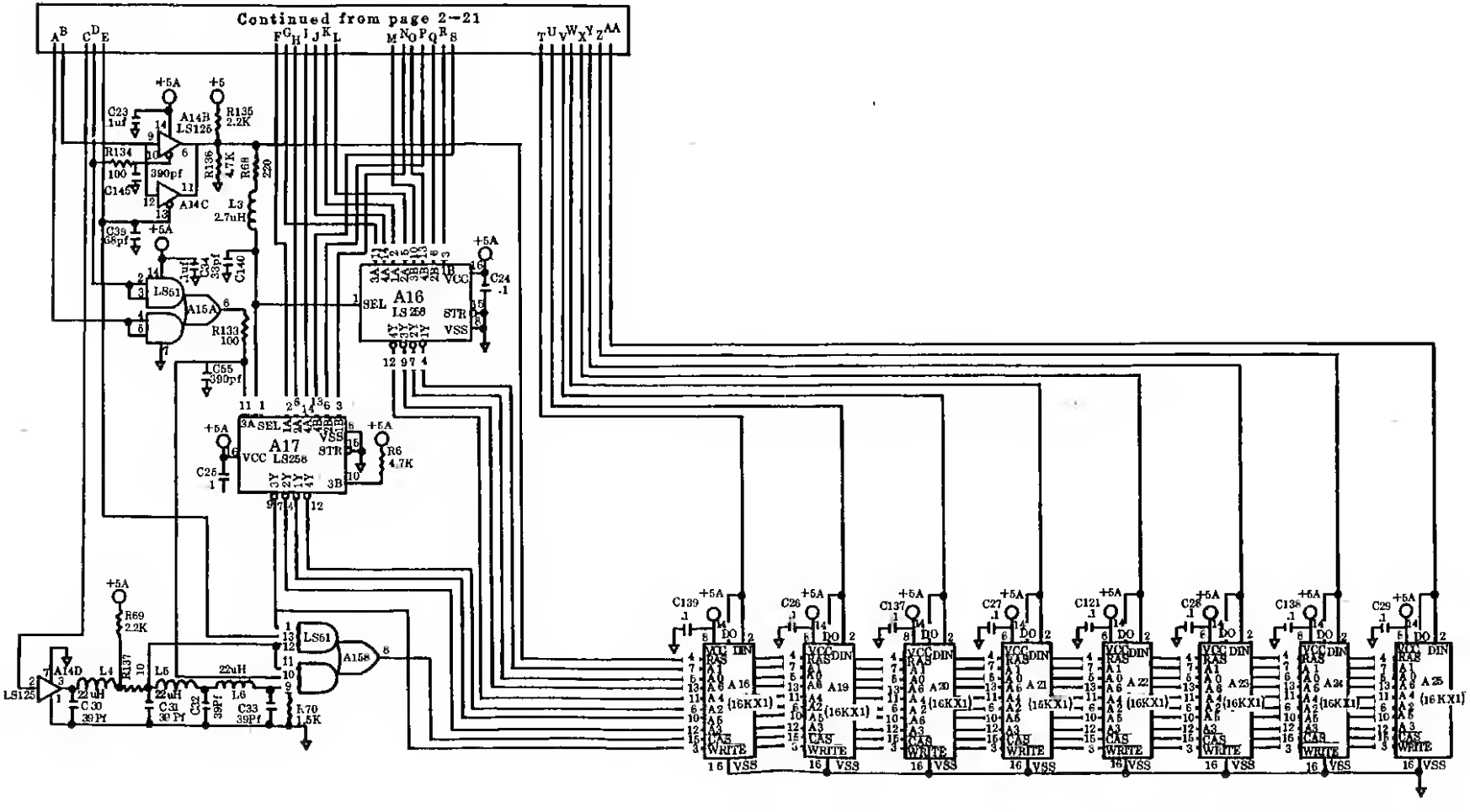

Figure 2-10. 5200 2-PORT Schematic
3 of 5

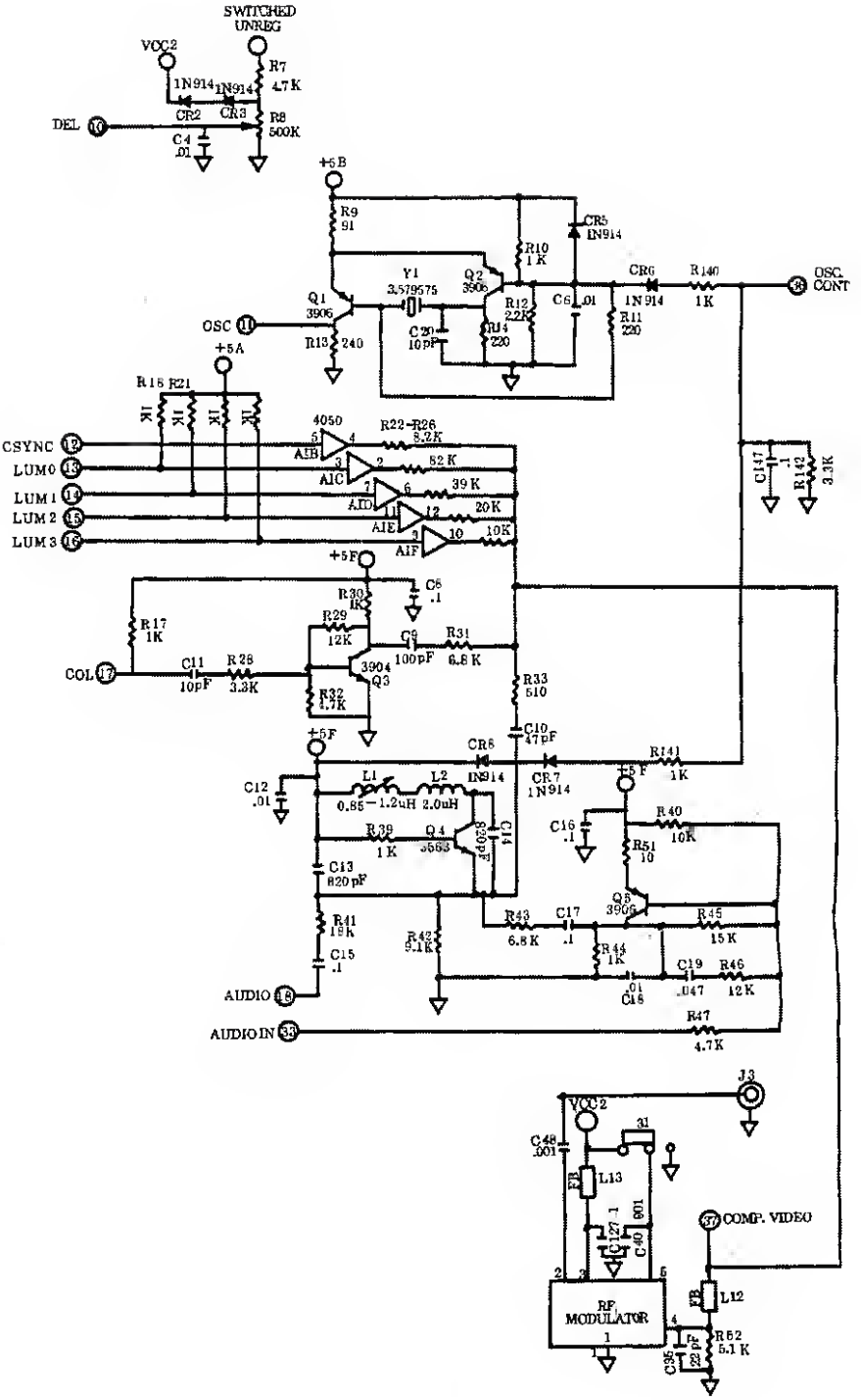

Figure 2-11. 5200 2-PORT Schematic 4 of 5

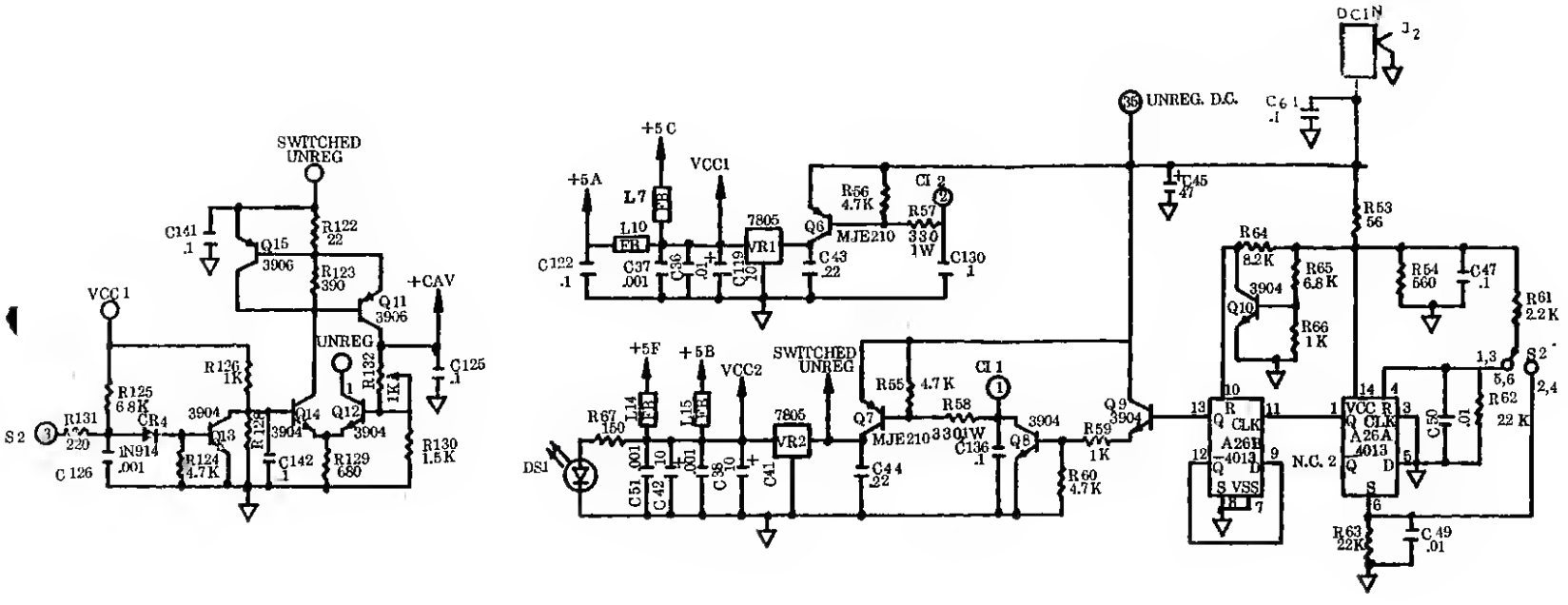

Figure 2-12. 5200 2-PORT Schematic
5 of 5

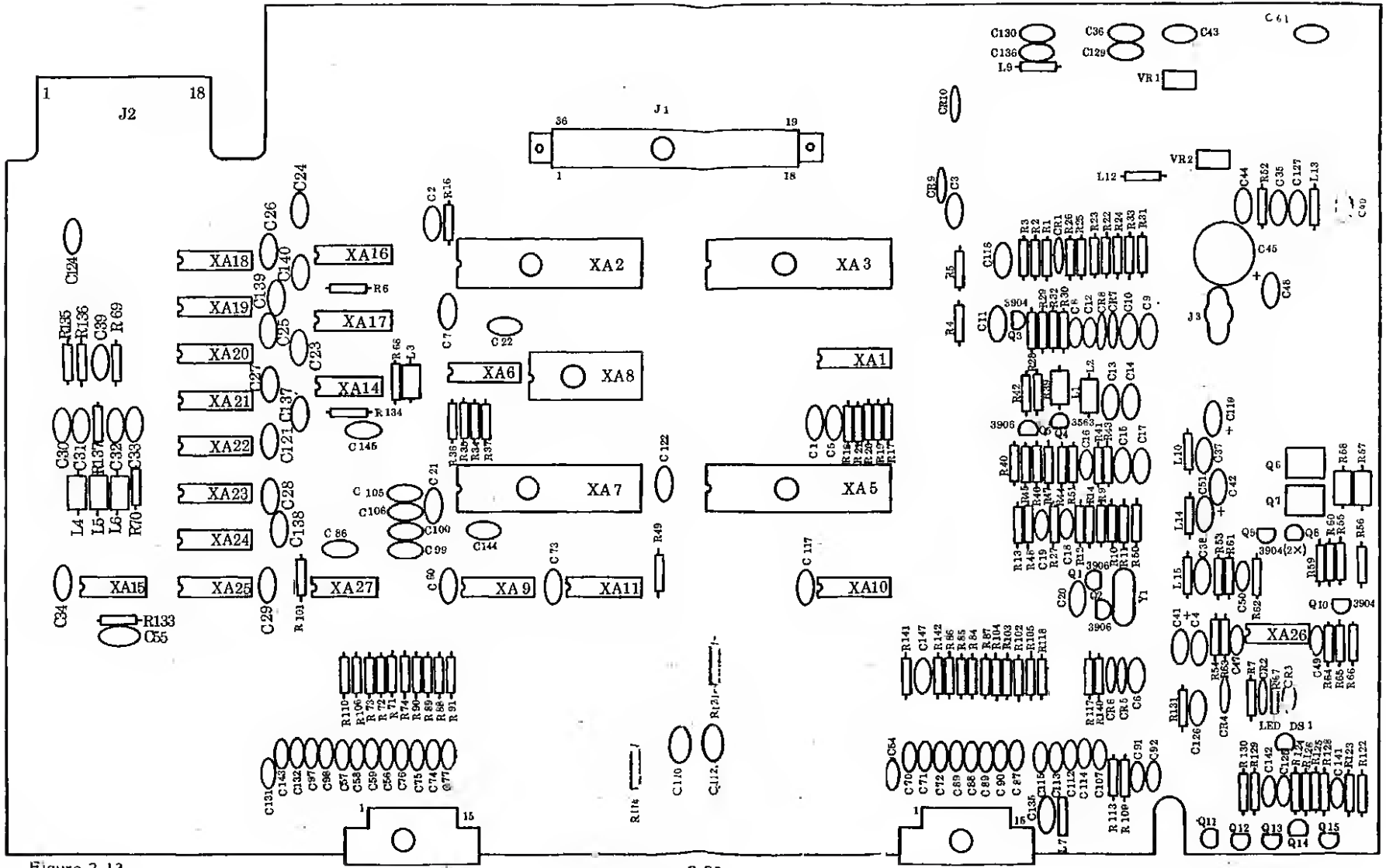

Figure 2-13.

5200 2-Port Silkscreen

SECTION 3

4-PORT MODEL 5200 TESTING

EQUIPMENT REQUIREMENTS

You require six basic pieces of equipment in order to analyze failures in the Model 5200. These items include:

- 15 MHz oscilloscope
- Diagnostic Cartridge (version 1.1)
- Model 5200 Port Board (Loop Back Board)
- CX5200 Field Service Manual
- color T.V. set (properly adjusted)
- voltmeter

TESTING WITH THE DIAGNOSTIC CARTRIDGE (VERSION 1.1)

All tests are reviewed in this section. If applicable, a Flowchart Entry Point is given. If a failure occurs, go to the flowchart indicated and continue troubleshooting.

OVERVIEW OF TESTS

The Diagnostic Cartridge (Version 1.1) contains a variety of test routines to assist you in identifying the source of problems in the Model 5200. The test cartridge is used in conjunction with the equipment listed at the beginning of this section. The tests available in the cartridge are:

- Color Bar
- Gray Bar
- Any Video
- Pokey Adjust
- RAM
- Verify OS ROM
- Port
- Tone

INITIALIZATION

To prepare the Model 5200 for testing, perform the following steps in the order given:

- Connect the switchbox to the VHF terminal(s) on the back of the T.V. Set.
- Plug the power adaptor into the opening on the switchbox marked Power.
- Plug the RF cable from the console into the opening on the switchbox marked Game. Be sure the select switch on the switchbox is set to the NORMAL position.
- Plug the Model 5200 Port Board into the player ports.
- Insert the Diagnostic Cartridge (Version 1.1)
- Turn on the T.V. Set and the Model 5200.

The Model 5200 tests are run using the Port Board (Loop Back Board) which automatically cycles through all of the tests. If a test fails: turn the unit off, remove the Port Board, plug a game controller into Port 1, and turn the unit back on. You can select any of the tests manually by pressing the proper key followed by the start key.

> **NOTE: The Diagnostic Cartridge will cycle automatically only if the Port Board is inserted before the unit is turned on.**

Press the * or # key followed by the start key to print this menu on the screen.

1=Any Video	7=Ram Test
2=Color Bars	8=Verify OS ROM
3=Gray Bars	9=Display Options
4=Port Test	0=Examine
5=Pokey Adjust	
6=Tone Test	

Options 9 and 0 are not used at this time.

The following pages show the tests as they appear with the Port Board plugged in.

If a test fails, go to the Flowchart Entry Point indicated for that test and begin troubleshooting.

POWER-UP SCREEN

The Power-up screen appears in a few seconds. It displays information about the inner workings of the unit. This screen shows:

- The type of TIA in the unit. NTSC appears if the GTIA is the proper one for that unit. If PAL appears, replace with a GTIA from your kit.
- The rev of ROM in the unit. (Not important at this time.)

After the initial power-up, this screen does not automatically appear again.

One of the following indicates a failure.

- Solid Colored (Black) Screen or Vertically Lined Screen
- Snowy Screen
- WARPED - Ragged Picture

Solid Colored (Black) Screen or Vertically Lined Screen

If a solid colored (Black) or vertically lined screen appears, the unit is suffering a catastrophic failure. This means that the unit is not functioning well enough to even put up a simple display.

Diagnostic Flowchart Entry Point: Pg. 4-2.

Snowy Screen

If, when turned on the unit displays no modulation on the screen, the failure is probably in the power circuitry. However, first check the following:

- Check that the select switch on the switchbox is set to the NORMAL position.
- Check the power adaptor using a standard voltmeter.

Diagnostic Flowchart Entry Point: Pg. 4-9.

Warped - Ragged Picture

In this failure, the power-up screen appears bent to one side with a ragged edge. The picture may roll or slide down and to the left of the screen. This means that the sync. signal broadcast by the GTIA is probably not functioning. Another possible cause is that the unit is not set on the same channel as the T.V. set. Check this before going to the flowcharts.

Diagnostic Flowchart Entry Point: Pg. 4-13.

COLOR BAR TEST

- Purpose: To test the GTIA chip and associated color circuitry for correct operation.
- Format: A screen of horizontal color bars displays (see Figure 3-1). The screen should be steady and unchanging. A gray or blue horizontal reference line runs across the screen about three bars from its bottom. This reference line is thinner than the bars around it. R8 should be adjusted so the bars immediately above and below the reference line are within one shade of each other. Proper operation of the unit is indicated by being able to make this adjustment and by consistent color within the entire span of each bar on the screen. Minor glitches on the edges of the color bars are acceptable. Leave this test on for at least ten seconds in order to catch any intermittent problems, such as a bar momentarily changing colors or blanking out.

NOTE: This figure is a black and white representation of a color television screen.

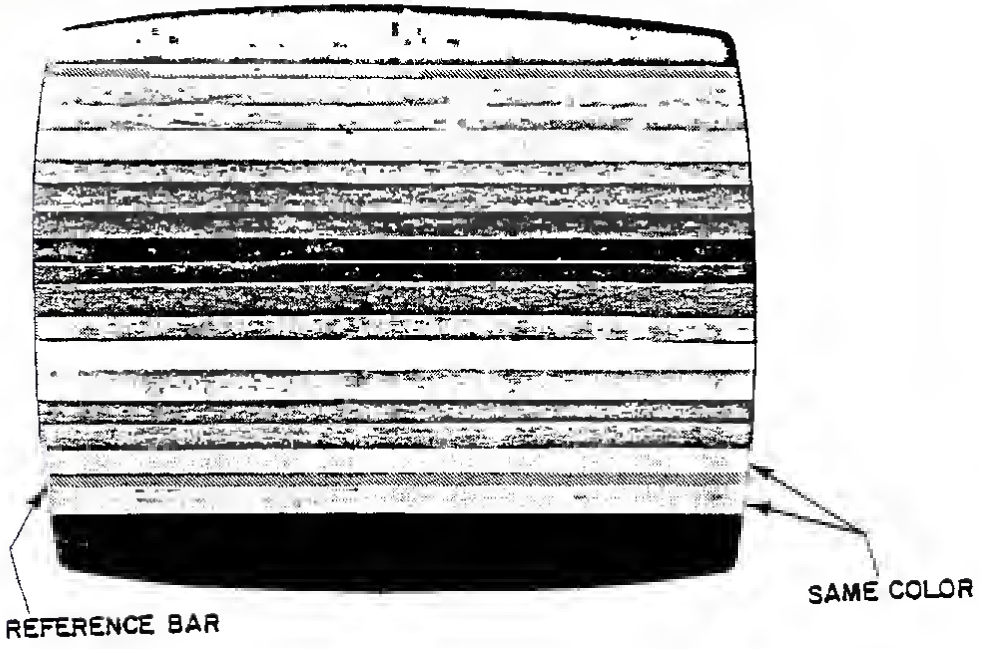

Figure 3-1 Color Bars Screen

Diagnostic Flowchart Entry Point: Pg. 4-14.

GRAY BAR TEST

- Purpose: To test the function of the luminescence lines (LM0 , LM1, LM2) from the GTIA chip.

- Format: Eight horizontal gray bars are displayed, going from black at the top to white at the bottom in even steps (see Figure 3-2). The screen should be steady and unchanging. These lines may have minor glitches on their edges. A thin white line always appears just over the top (black) bar. No color should appear anywhere on the screen. The areas above the top (black) bar and below the bottom (white) bar are of no importance to the test. This test should be left on for at least ten seconds to ensure that there is no "flashing" of any color or shifting of the gray bars.

Figure 3-2. Gray Bar Screen

Diagnostic Flowchart Entry Point: Pg. 4-16.

ANYVIDEO SCREEN

- Purpose: To test the video generation of the GTIA and ANTIC chips.
- Format: The screen should have a black background with eight vertical bars. Half of the vertical bars should be narrow, and the other half much wider. A horizontal bar should appear across the top of the screen. From left to right, the shade of color on the horizontal bar should change. On the right of the bar, two Vs should be displayed, right side up.

NOTE: Figure 3-3 is a black and white representation of a colored screen.

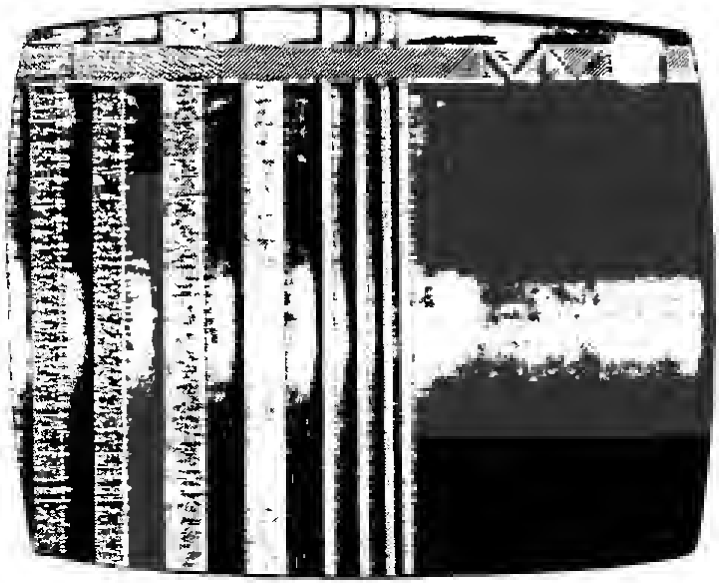

Figure 3-3. Any Video Test Screen

If the Any Video test fails, swapout U3, U5.

POKEY ADJUST

- Purpose: To check the value of the pot line for the controller ports.
- Format: Adjust R132 to make the value in Port 1, HOR position read 112 ± 1. All other values should read between 100 and 124.

NOTE: Figure 3-4 shows a sample Pokey Adjust screen. The values on your screen may differ from those shown in Figure 3-4.

	HOR	VERT	KB
1	112	107	Ø
2	110	115	Ø
3	110	118	Ø
4	110	110	Ø

Figure 3-4. Pokey Adjust Screen.

Diagnostic Flowchart Entry Point: (Refer to Table 3-1, Diagnostic Error Codes).

ERROR SUMMARY

Errors during the RAM, PORT, and verify OS ROM Test are displayed on the matrix shown in Figure 3-5.

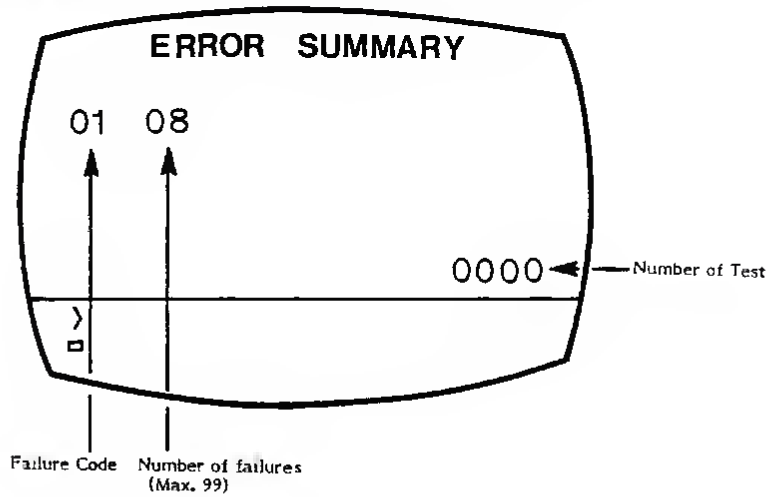

Figure 3-5. Error Summary.

Table 3-1 shows the defective component and/or the flowchart entry point which corresponds to the Failure Code number on the Error Summary.

Table 3-1

Diagnostic Error Codes

Failure Code	Failure	Reference Page #
0	RAM - Chip 1 - U25	RAM Test, Pg. 3-10
1	RAM - Chip 2 - U24	"
2	RAM - Chip 3 - U23	"
3	RAM - Chip 4 - U22	"
4	RAM - Chip 5 - U21	"
5	RAM - Chip 6 - U20	"
6	RAM - Chip 7 - U19	"
7	RAM - Chip 8 - U18	"
8	Port 1 - Data - Keyboard	Keyboard Troubleshooting Pg. 4-21
9	Port 2 - Data - Keyboard	"
10	Port 3 - Data - Keyboard	"
11	Port 4 - Data - Keyboard	"
12	Trigger 0	Trigger Line Trouble-shooting, Pg. 4-19
13	Trigger 1	"
14	Trigger 2	"
15	Trigger 3	"
16	Soft Fire 0	Softfire Troubleshooting Pg. 4-20
17	Soft Fire 1	"
18	Soft Fire 2	"
19	Soft Fire 3	"
20	Serial Port 0	Not Used
21	Serial Port 1	Not Used
22	Pot Line 0	Pot Line Troubleshooting Pgs. 4-17, 4-18
23	Pot Line 1	"
24	Pot Line 2	"
25	Pot Line 3	"
26	Pot Line 4	"
27	Pot Line 5	"
28	Pot Line 6	"
29	Pot Line 7	"
30	O.S. ROM - U8	Verify OS ROM, Pg. 3-10

RAM TEST

- Purpose: To test the 16K RAM chips for proper functioning.
- Format: This test takes approximately 10 seconds during which the screen is solid black. At the end of this time period, if the test has failed, a Failure Code number appears on the screen to signify which chip is defective. Swap out the chip corresponding to the Diagnostic Error Code (Table 3-1). If this does not solve the problem, swapout the chips U15, U16, U17, and U28 for PCB #CA018087. For PCB #CA020108, swapout A14, A15, A16 and A17.

No Diagnostic Flowchart Entry Point

VERIFY OS ROM

- Purpose: To test the OS ROM (U8) for proper functioning.
- Format: If error code 30 appears on the Error Summary (Figure 3-5) the OS ROM chip is defective. Replace the defective chip and restart the test.

No Diagnostic Flowchart Entry Point

PORT TEST

- Purpose: This test checks the functions of the POKEY, GTIA and associated PORT circuitry.
- Format: The test is done internally with failures appearing on the Error Summary (Figure 3-5).

Diagnostic Flowchart Entry Point: (Refer to Table 3-1, Diagnostic Error Codes).

TONE TEST

- Purpose: To check the audio generation section of the POKEY (U7).
- Format: The screen prints at the bottom which register is being tested (Register 4,3,2,1). A series of eight tones will sound on each register. The first two tones may be inaudible but you can hear the speaker click.

Diagnostic Flowchart Entry Point: Pg. 4-27.

SECTION 3A

2-PORT MODEL 5200 TESTING

EQUIPMENT REQUIREMENTS

You require seven basic pieces of equipment in order to analyze failures in the Model 5200 2-port. These items include:

- 15 MHz oscilloscope
- Diagnostic Cartridge (version 1.1)
- 5200 Port Board (Loop Back Board)
- CX5200 Field Service Manual
- Color T.V. set (properly adjusted)
- Volt-ohmmeter
- Known-good 5200 controller

TESTING WITH THE DIAGNOSTIC CARTRIDGE (VERSION 1.1)

All of the tests are reviewed in this section. If a test failure occurs, enter the diagnostic flowchart where indicated and continue troubleshooting.

OVERVIEW OF TESTS

The Diagnostic Cartridge (Version 1.1) contains a variety of test routines to assist you in identifying the source of problems in the 5200. The test cartridge is used in conjunction with the equipment listed at the beginning of this section. The tests available in the cartridge are:

- Color Bar
- Gray Bar
- Any Video
- Verify OS ROM
- Tone
- RAM
- Pokey Adjust

INITIALIZATION

To prepare the 5200 for testing, perform the following steps in the order given:

- Connect the switchbox to the VHF terminal(s) on the back of the T.V. set.
- Plug the power adaptor into the console.
- Plug the RF cable from the console into the opening on the switchbox marked GAME. Be sure the select switch on the switchbox is set to the GAME/COMPUTER position.

- Plug a game controller into port 1 of the 5200.
- Insert the Diagnostic Cartridge (Version 1.1).
- Turn on the T.V. (Select Channel 2 or 3) and the 5200.

Press the * or # key followed by the start key to display this menu on the screen.

1=Any Video	7=Ram Test
2=Color Bars	8=Verify OS ROM
3=Gray Bars	9=Display Options
4=Port Test	0=Examine
5=Pokey Adjust	
6=Tone Test	

Test #4 and 0 are not used.

To run the tests press the proper numerical key on the 5200 controller and then press START. To escape a test (except #5), press any key. To escape #5, POKEY ADJUST, press the bottom fire button.

The following pages show the tests as they appear with the Port Board plugged in.

If a test indicates a failure, go to the Flowchart Entry Point indicated for that test and begin troubleshooting.

POWER-UP SCREEN

The power-up screen displays information about the internal status of the unit. It shows:

- The type of TIA in the unit. If the GTIA is the proper one for the unit, NTSC appears. If PAL appears, replace the GTIA with one from your kit.
- The revision level of the ROM in the unit. (Not important at this time.)

If at power-up this screen does not appear, one of the following screens appears:

- Solid Colored (Black) Screen or Vertically Lined Screen
- Snowy Screen
- Warped - Ragged Picture

Proceed to the description of that failure which follows.

GRAY BAR TEST

- Purpose: To test the functioning of the luminescence lines (LM1, LM2, LM3) from the GTIA chip.
- Procedure: Press key 3 followed by START.
- Format: Eight horizontal gray bars are displayed, going from black at the top to white at the bottom in even steps (see Figure 3A-2). The screen should be steady and unchanging. These lines may have minor glitches on their edges. A thin white line always appears just over the top (black) bar. No color should appear anywhere on the screen. The areas above the top (black) bar and below the bottom (white) bar are of no importance to the test. This test should be left on for at least ten seconds to ensure that there is no flashing of any color or shifting of the gray bars.

Diagnostic Flowchart Entry Point: Pg. 4A-16.

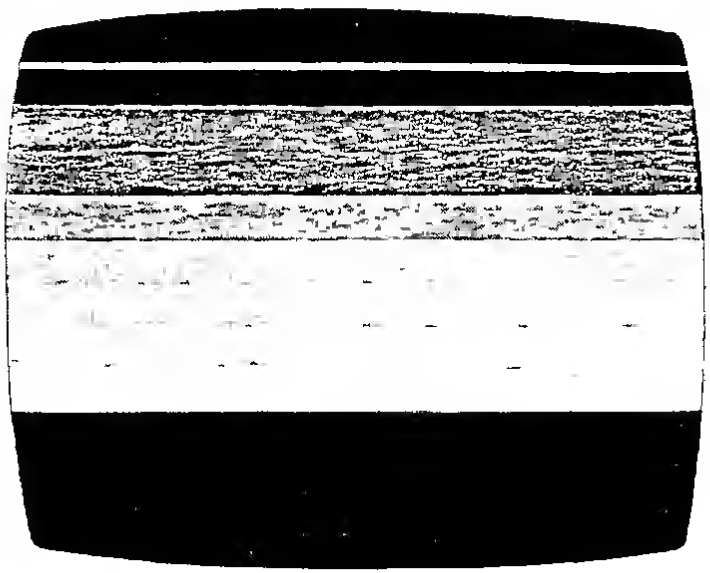

Figure 3A-2. Gray Bar Screen

ANY VIDEO SCREEN

- Purpose: To test the video generation of the GTIA and ANTIC chips.
- Procedure: Press key 1 followed by START.
- Format: The screen should have a black background with eight vertical bars. Half of the vertical bars should be narrow and the other half much wider. A horizontal bar should appear across the top of the screen. From left to right the shade of color on the horizontal bar should change. On the right of the bar two V's should be displayed, right side up.

If the Any Video tests fails, swapout A3 and A5, and restart the test.

NOTE: Figure 3-3 is a black and white representation of a colored screen.

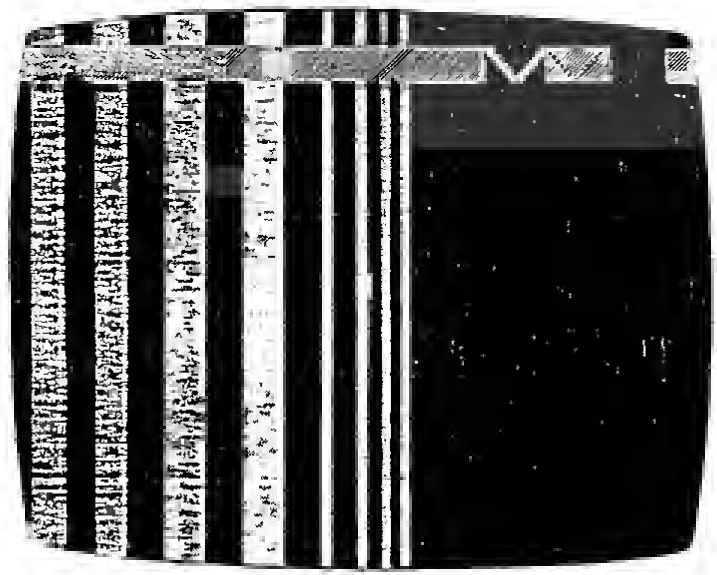

Figure 3A-3. Any Video Test Screen

VERIFY OS ROM

- Purpose: To test the OS ROM (A8) for proper functioning.
- Procedure: Press key 8 followed by START.
- Format: If error code 30 appears on the Error Summary (Figure 3-1, pg. 3-8) the OS ROM chip is defective. Replace the defective chip and restart the test.

No Flowchart Entry Point.

TONE TEST

- Purpose: To check the audio generation section of the POKEY (A7).
- Procedure: Press key 6 followed by START.
- Format: The screen prints at the bottom: **Register (1 to 4) ?** Press key 1 followed by START. A series of eight tones sounds on each register. The first two tones may be inaudible but you can hear the speaker click. Repeat for registers 2,3,4.

Diagnostic Flowchart Entry Point: Pg. 4A-17.

POKEY (PORT) TEST

- Purpose: To determine any port line failures and confirm the correct operation of the POKEY chip.

- Procedure: Press key 5 followed by START.

- Format: When you press the keys listed in the first column below, the numbers and letters in the second column should appear on the screen in the KB column:

KEY	KB Readings
1	1
2	2
3	3
4	4
5	5
6	6
7	7
8	8
9	9
#	D
0	0
*	E
START	A
PAUSE	B
RESET	C

NOTE: When using the 1.1 Diagnostic Cartridge to test the 2-PORT 5200, the KB Readings may appear to the right of any of the four ports listed on the screen, besides the port you are testing. They must, however, appear to the right of the port you are testing for the test to be valid.

If the keys do not register correctly when pressed, proceed to KEYBOARD TROUBLESHOOTING, page 4A-22.

Press the bottom fire button. The POKEY ADJUST screen should disappear. If it doesn't proceed to page 3A-9.

Press key 5 followed by START, again bringing the POKEY ADJUST pattern to the screen. Unplug the controller from Port 1 and insert it into Port 2. Repeat Step 2.

RAM TEST

Initialization for RAM Test

- Purpose: To set the 5200 up for a loop test to fully check the RAM (A18-A25).

- Procedure: Press key 9 followed by START.
  Then press key 2 followed by START.
  Again press key 2 followed by START.
  DISPLAY ERRORS CONTINUOUS TEST appears in the green band on the screen.

RAM Test Procedure

- Purpose: To test the functioning of the 16K RAM chips.

- Procedure: Press key 7 followed by START.

- Format: Each test lasts approximately ten seconds. The screen illustrated below appears. If an error is listed on the screen, refer to Table 3-1, page 3-9, to determine which chip has failed.

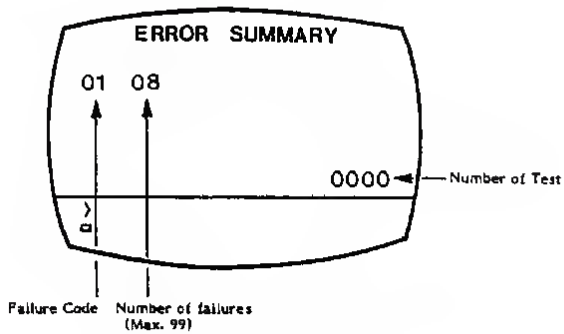

Figure 3A-4. RAM Test Screen

POKEY ADJUST TEST

- Purpose: To test the +CAV circuit output to the controller for proper pot functioning.

- Procedure:
  1. Remove the PCB assembly from its plastic housing.
  2. Turn on the unit and press key 5 followed by START.
  3. Plug in the loop back board (note that connectors 2 and 3 will not plug into anything).
  4. Adjust R132 to make the value in Port 1, HOR position 112 ±1. The values on 1 VERT, 4 HOR and 4 VER should read between 100 and 124, as illustrated below in Figure 3A-5. (Ports 2 and 3 have no bearing on the test for the 2-port 5200.)

	HOR	VERT	KB
1	110	107	Ø
2	110	115	Ø
3	110	118	Ø
4	110	110	Ø

Figure 3A-5. POKEY ADJUST Test Screen

If the unit cannot be adjusted or if values are out of range, proceed to the Flowchart Entry Point: Pg. 4A-20.

POKEY SOFTFIRE TEST

- Connect the oscilloscope to pin 16 of A7 (1v/division;10ms/div.).
- Insert the controller into port 1.
- Press key 5 followed by START.
- Press the top fire button (softfire).
- A 5v p-p square wave signal should appear. If it does not, proceed to the SOFTFIRE TROUBLESHOOTING FLOWCHART, page 4A-19.
- Unplug the controller from port 1 and plug it into port 2.
- Repeat the fourth and fifth steps for port 2.

SECTION 4

4-PORT 5200 DIAGNOSTIC FLOWCHART

The Diagnostic Flowchart is intended to be easy to use and the primary aid when troubleshooting the 4-Port 5200. Follow the prompts in the order presented. When a question is asked, follow the line from the box that best applies to your unit's condition. When that line terminates with a letter inside a circle, locate the letter on a different page and continue the diagnosis. The flowchart leaves nothing to chance; it tells you when to perform a specific test and when to replace components.

SWAPOUT PROCEDURE

At many places in the diagnostic flowchart, a box tells you to "swapout" a component, a chip, or a number of chips in a particular order. The "swapout" instruction means that you should replace the indicated components (one at a time) with known-good components of the same type. The unit should then be tested with the new, known-good component(s) in place to see whether the swapout solved the problem being checked. If the swapout did not fix the problem, leave the new chip in and swapout the next. Repeat this procedure for the rest of the components. Once the unit functions properly, reinstall the original IC's one by one to determine which are actually defective.

REPLACE IN ORDER

The "replace in order" instruction means that you should replace the components indicated in the order listed until the result called out in the previous block is obtained.

F - Some lines terminate with an **F** inside a circle. When this occurs, return to the beginning of the test sequence on page 3-1.

N - Some lines terminate with an **N** inside a circle. When this occurs, call your Atari Repair Hotline.

Inside California
(800) 672-1466

Outside California
(800) 538-1535
(800) 538-1536

Changed by
ECN #0036
6/21/83

Black Screen Troubleshooting

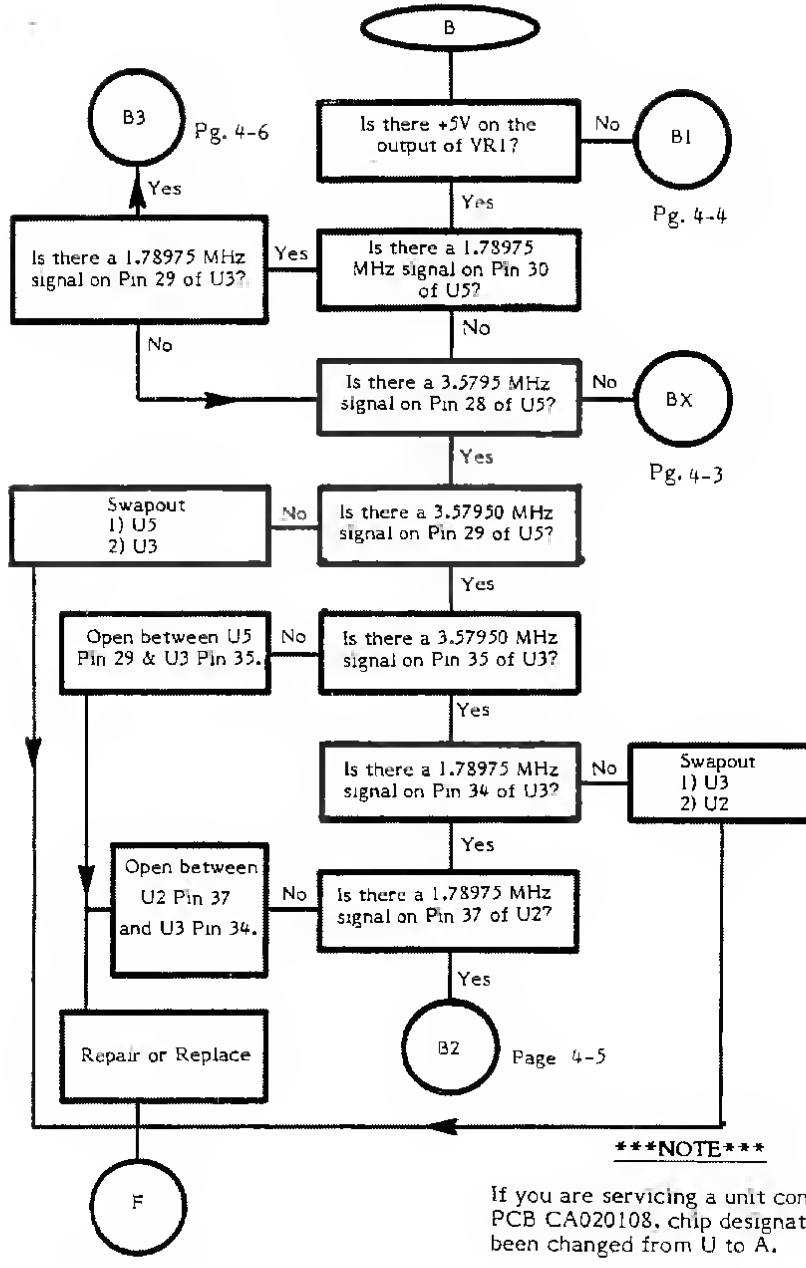

NOTE

If you are servicing a unit containing PCB CA020108, chip designators have been changed from U to A.

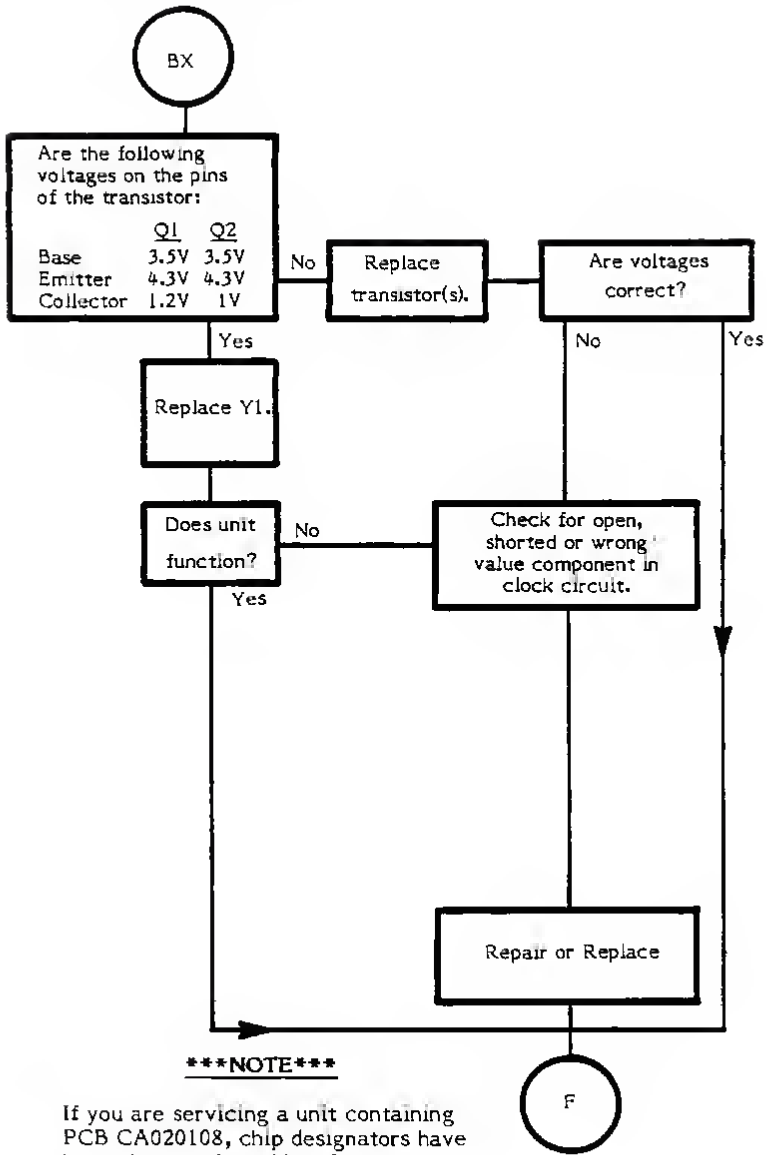

NOTE

If you are servicing a unit containing PCB CA020108, chip designators have been changed from U to A.

Black Screen Troubleshooting (Cont.)

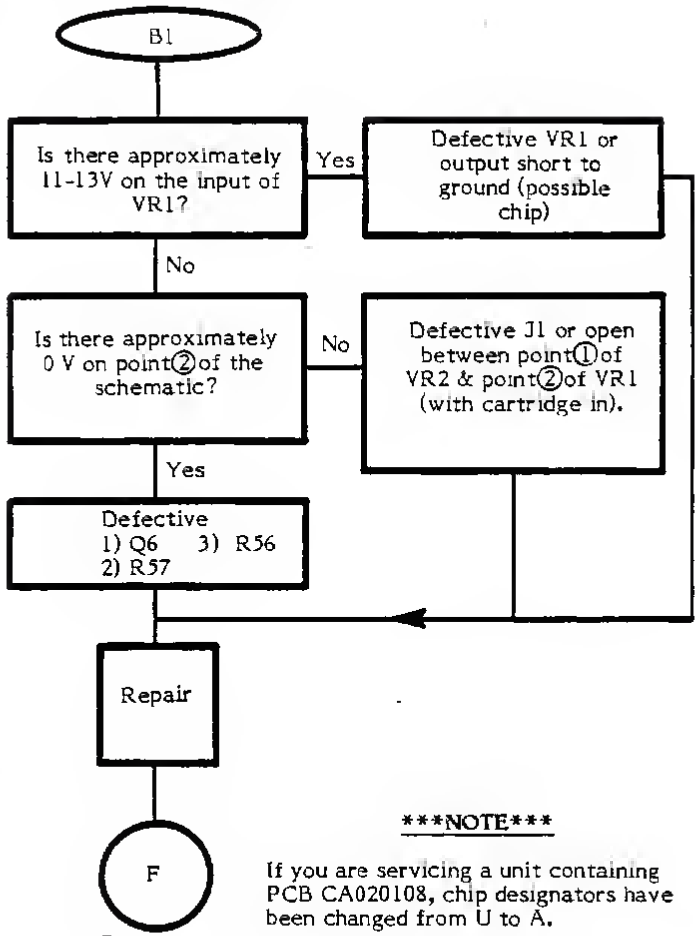

NOTE

If you are servicing a unit containing PCB CA020108, chip designators have been changed from U to A.

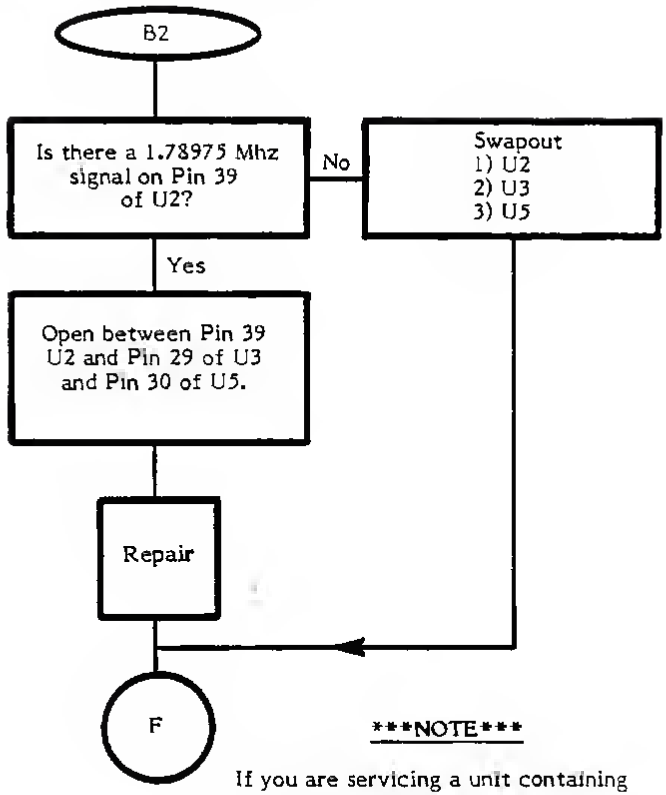

NOTE

If you are servicing a unit containing PCB CA020108, chip designators have been changed from U to A.

PCB # CA020108	CA013087	+5	Gnd
A1	U1	1	8
A2	U2	8	1,21
A3	U3	28	1
	U4	20	10
A5	U5	27	3
A6	U6	16	8
A7	U7	17	1
A8	U8	24	12
A9	U9	16	8
A10	U10	16	8
A11	U11	16	8
A12	U12	16	8
A13	U13	16	8
A14	U14	14	7
	U15	20	10
A16	U16	16	8
A17	U17	16	8
A18	U18	8	16
A19	U19	8	16
A20	U20	8	16
A21	U21	8	16
A22	U22	8	16
A23	U23	8	16
A24	U24	8	16
A25	U25	8	16
	U26	Not used	
A27	U27	14	7
	U28	14	7
	U29	14	7
A15		14	7
A26		14	7

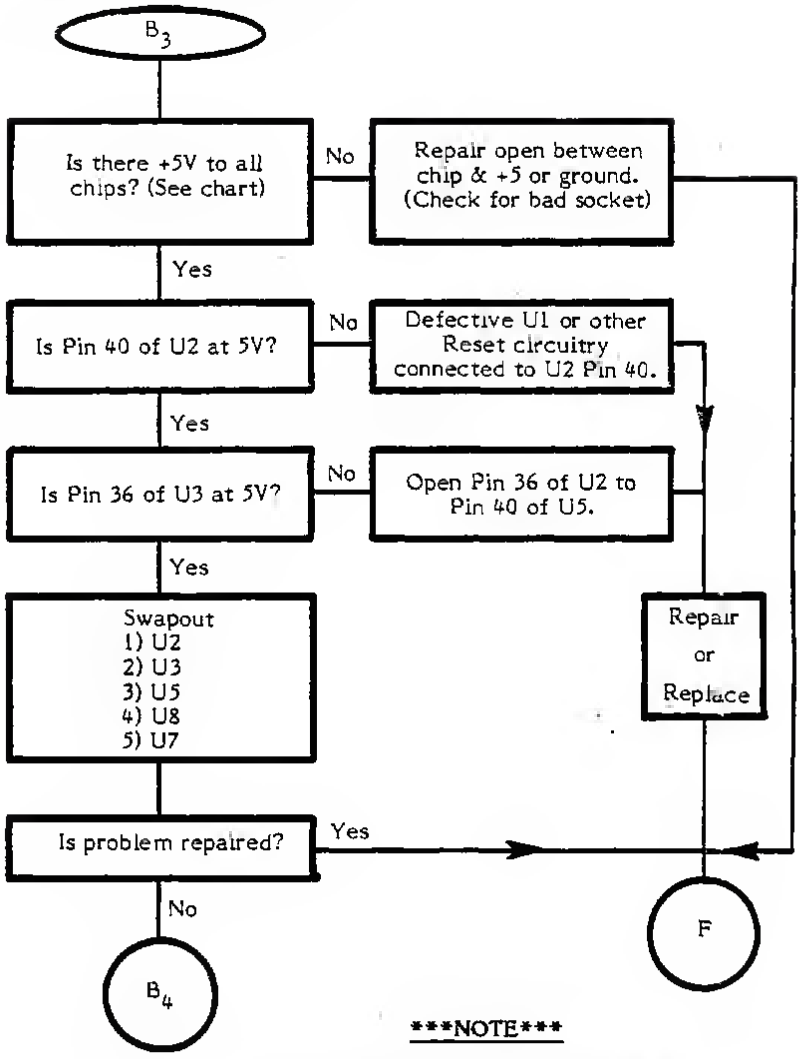

Page 4-7

NOTE

If you are servicing a unit containing PCB CA020108, chip designators have been changed from U to A.

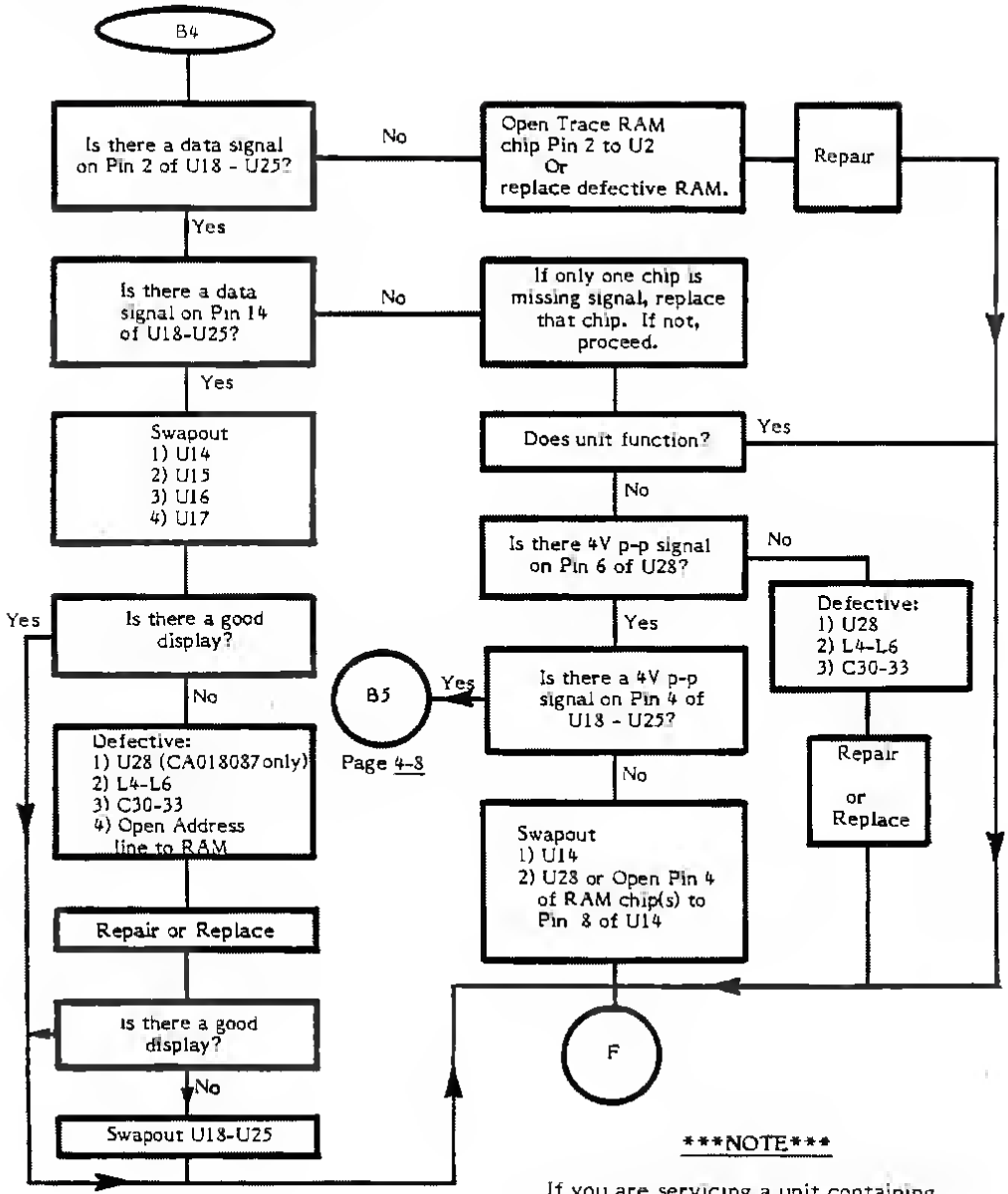

NOTE

If you are servicing a unit containing PCB CA020108, chip designators have been changed from U to A.

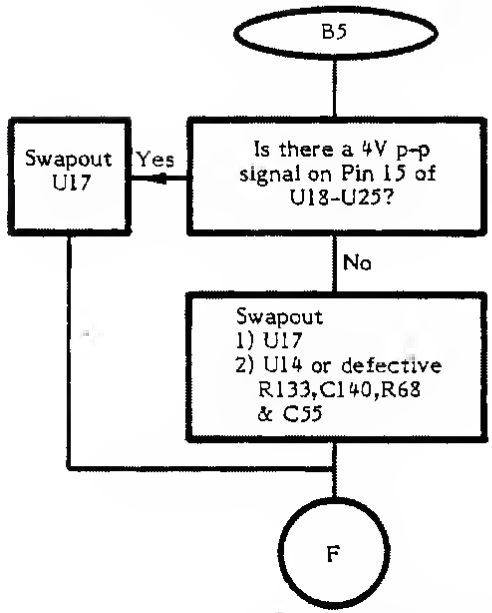

NOTE

If you are servicing a unit containing PCB CA020108, chip designators have been changed from U to A.

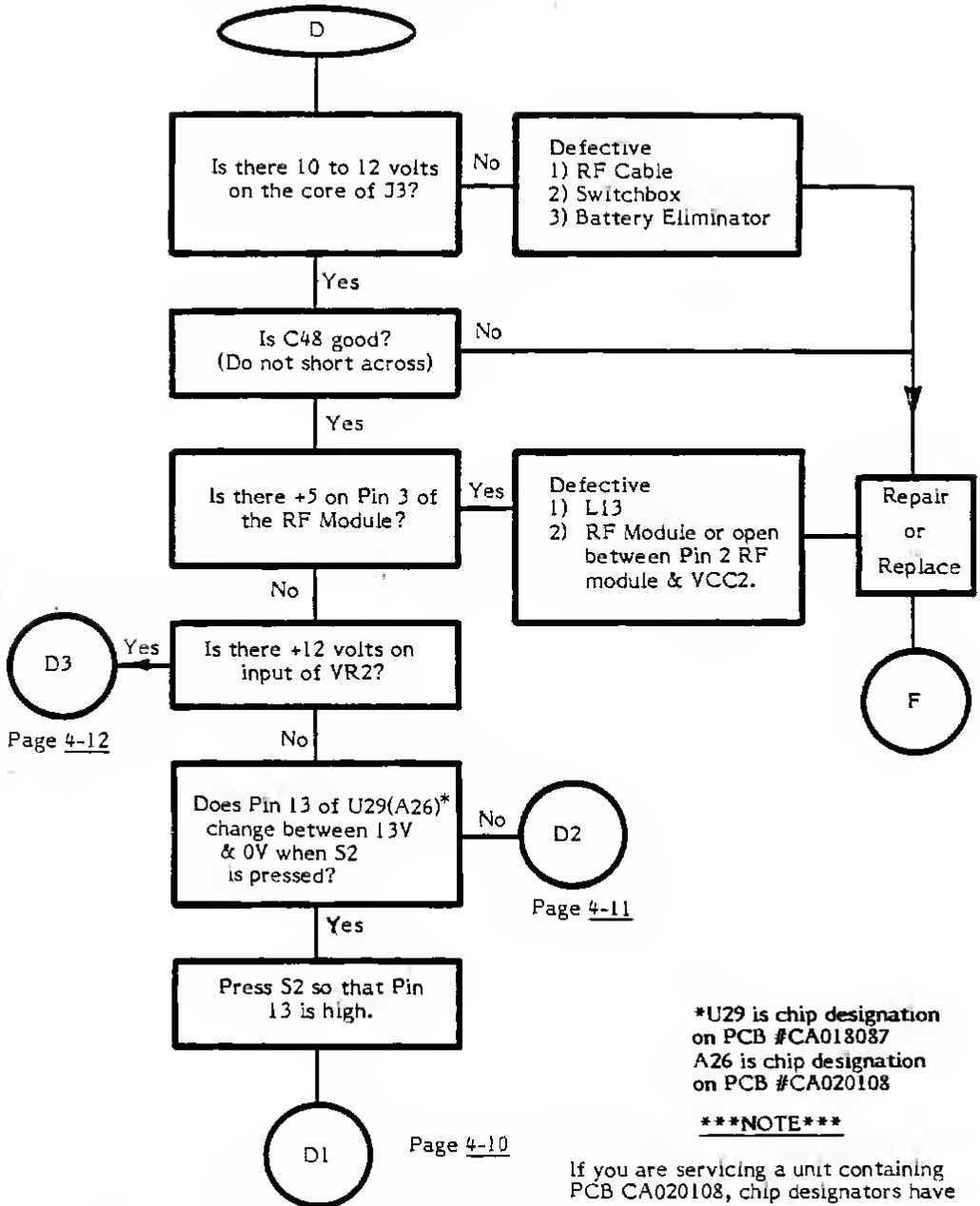

***U29 is chip designation on PCB #CA018087**
A26 is chip designation on PCB #CA020108

*****NOTE*****

If you are servicing a unit containing PCB CA020108, chip designators have been changed from U to A.

Snowy Screen Troubleshooting (cont.)

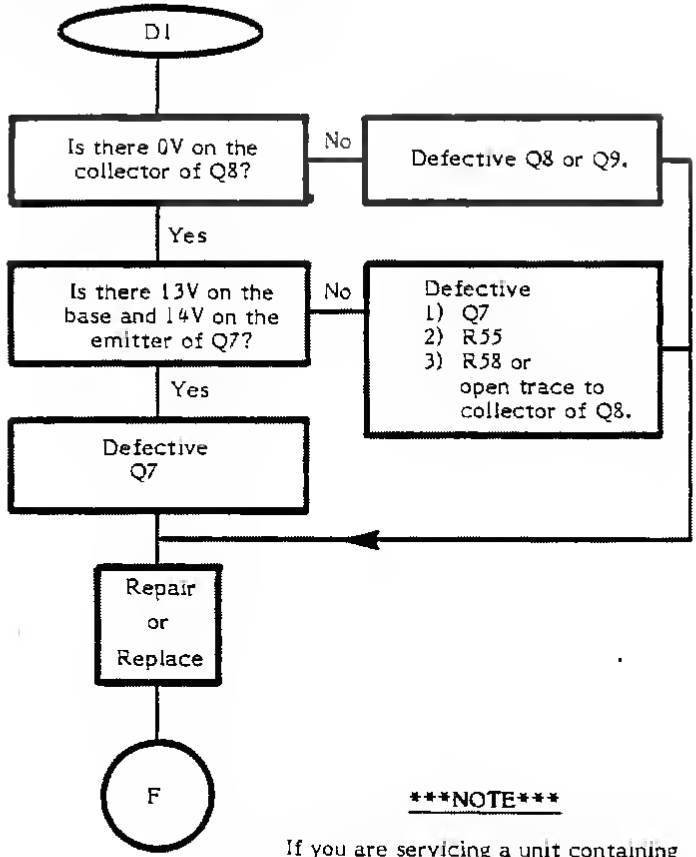

NOTE

If you are servicing a unit containing PCB CA020108, chip designators have been changed from U to A.

Snowy Screen Troubleshooting (cont.)

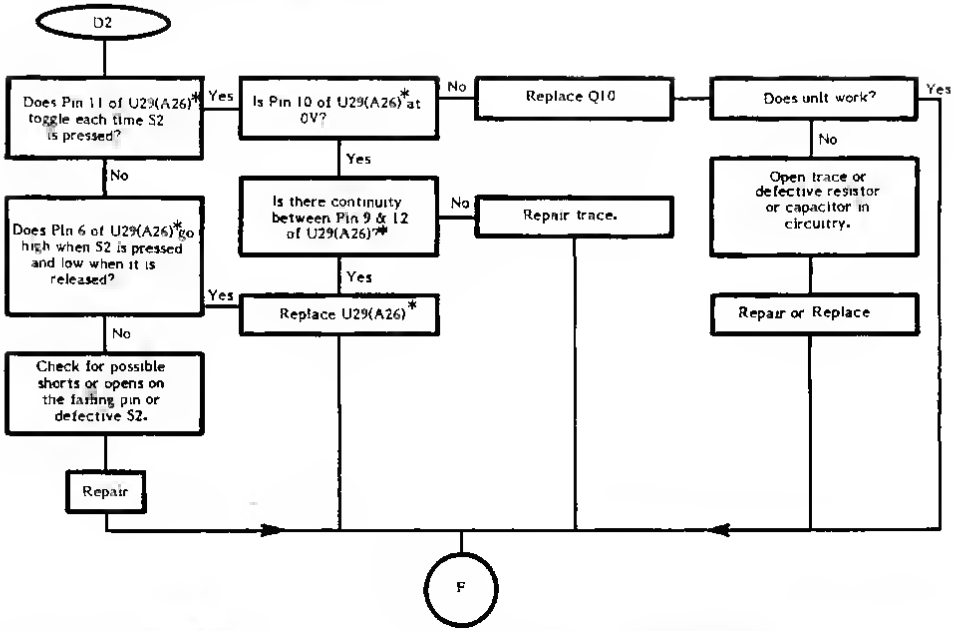

*U29 is chip designation on PCB #CA018087
A26 is chip designation on PCB #CA020108

NOTE

If you are servicing a unit containing PCB CA020108, chip designators have been changed from U to A.

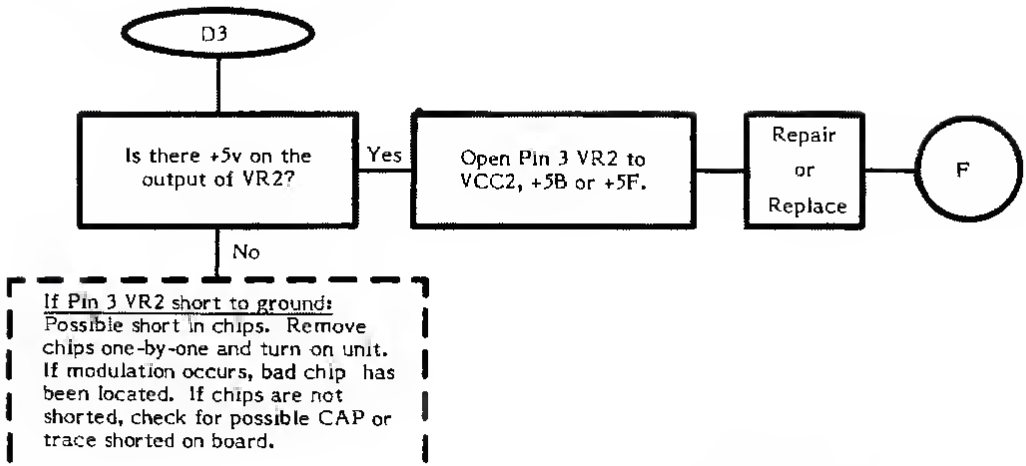

NOTE

If you are servicing a unit containing PCB CA020108, chip designators have been changed from U to A.

Warped Ragged Picture Troubleshooting

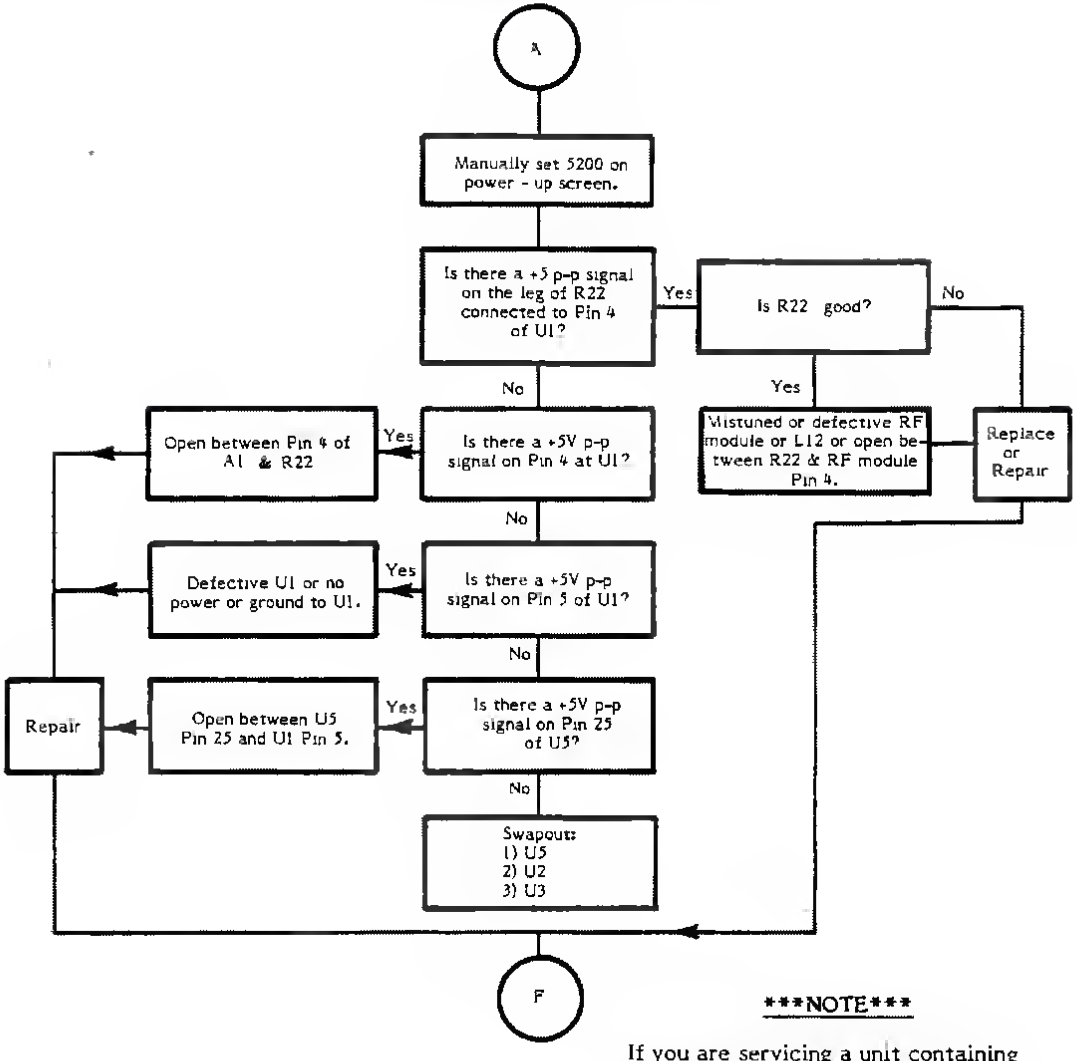

NOTE

If you are servicing a unit containing PCB CA020108, chip designators have been changed from U to A.

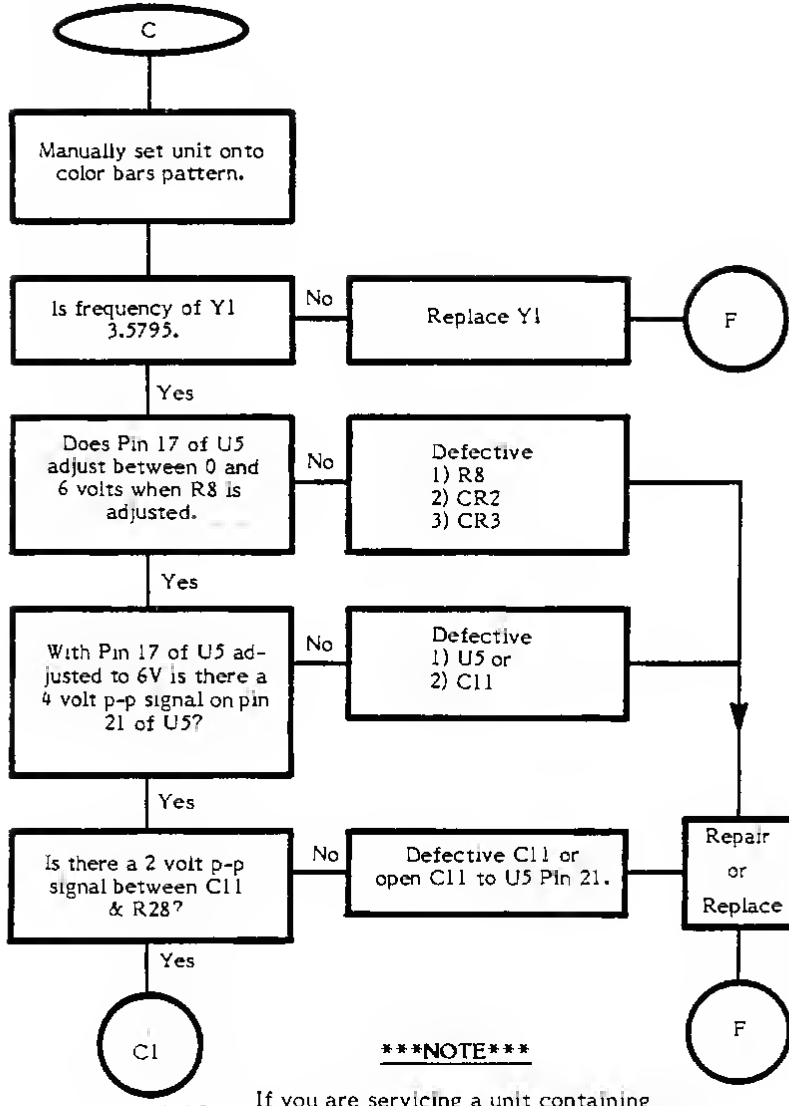

Page 4-15

NOTE

If you are servicing a unit containing PCB CA020108, chip designators have been changed from U to A.

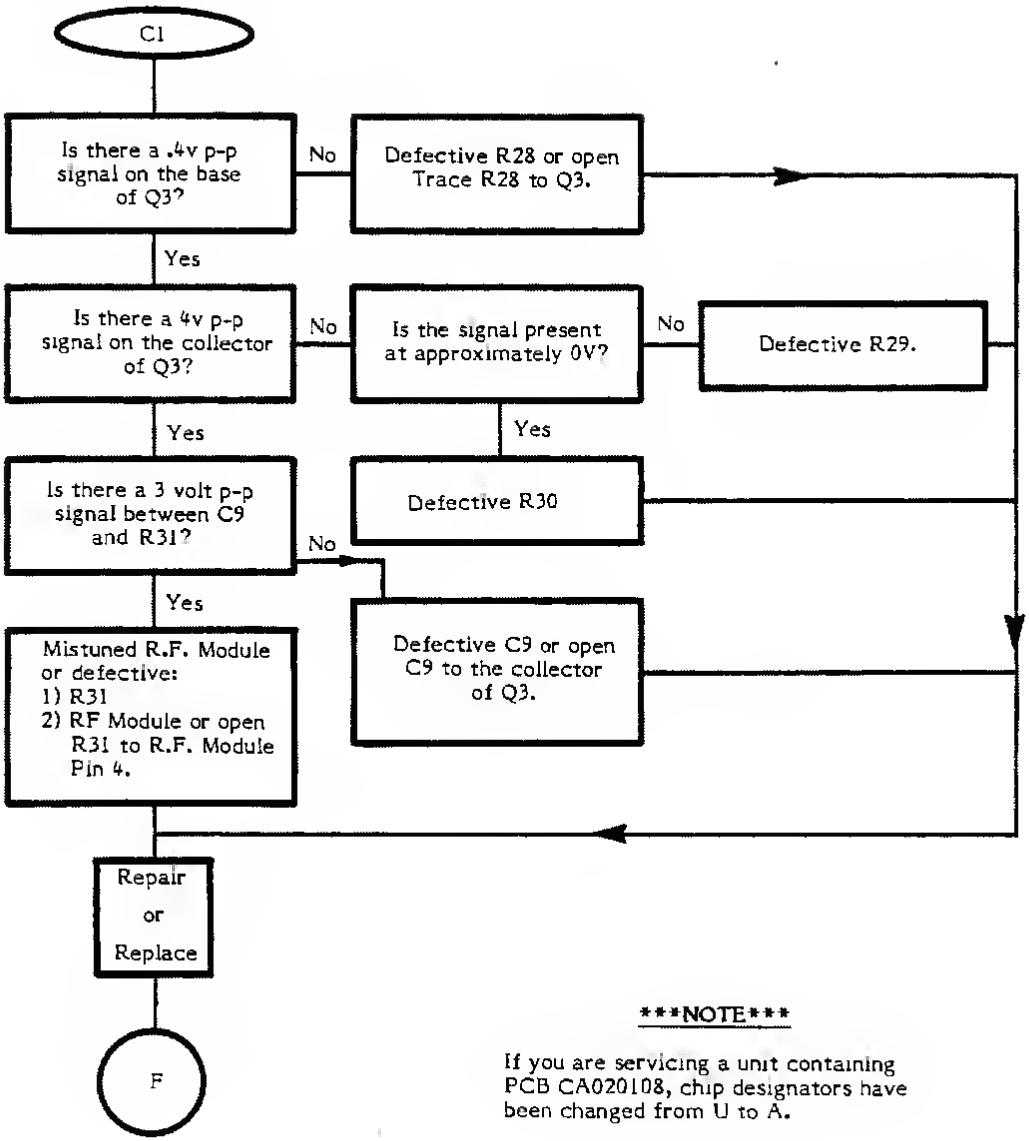

NOTE

If you are servicing a unit containing PCB CA020108, chip designators have been changed from U to A.

Gray Bars Troubleshooting

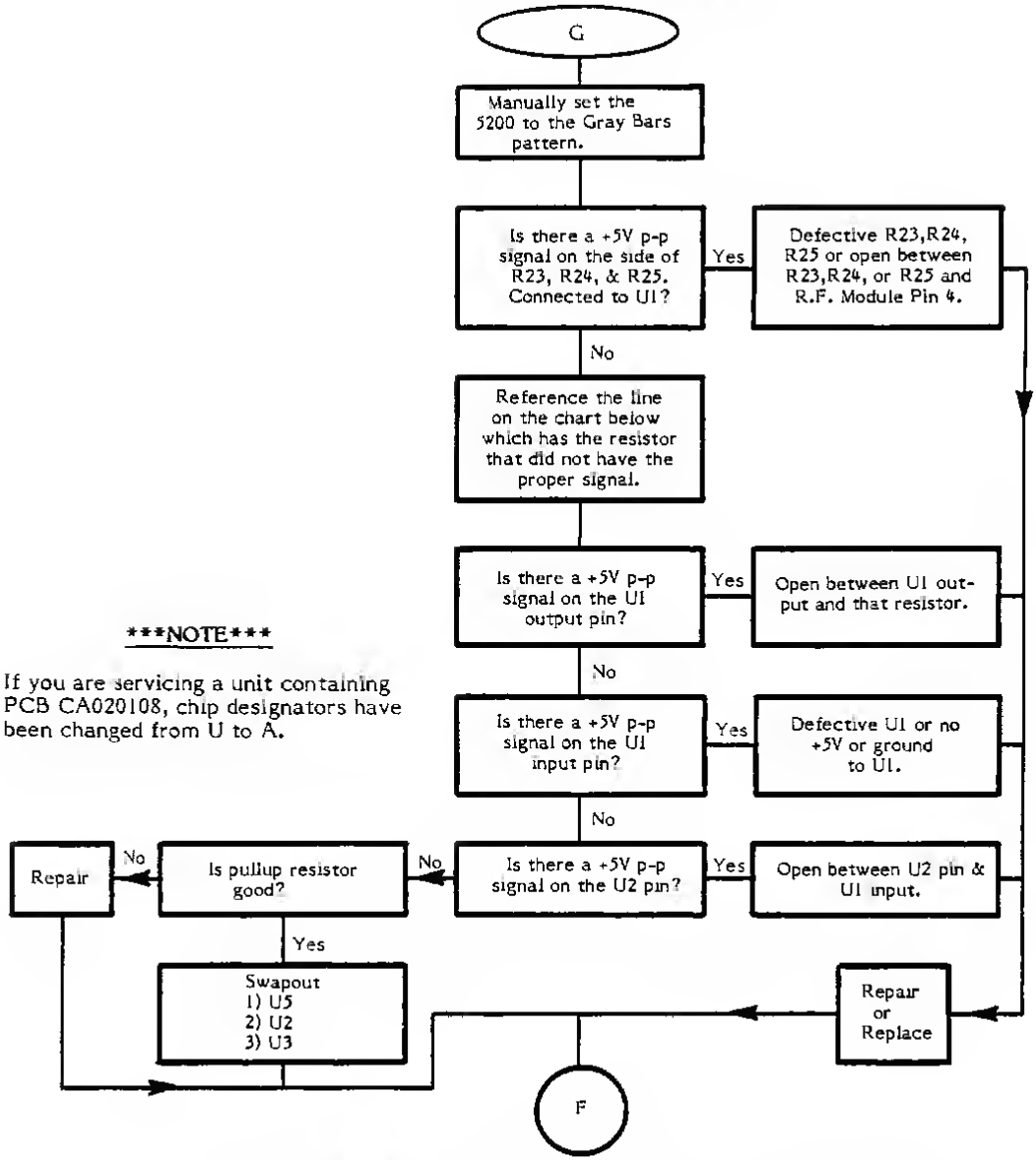

NOTE

If you are servicing a unit containing PCB CA020108, chip designators have been changed from U to A.

Line #	Resistor #	U1 Output	U1 Input	Pullup #	U5 Pin #
LMØ	R23	2	3	R18	31
LM1	R24	6	7	R19	22
LM2	R25	12	11	R20	23

Pot Control Line Troubleshooting

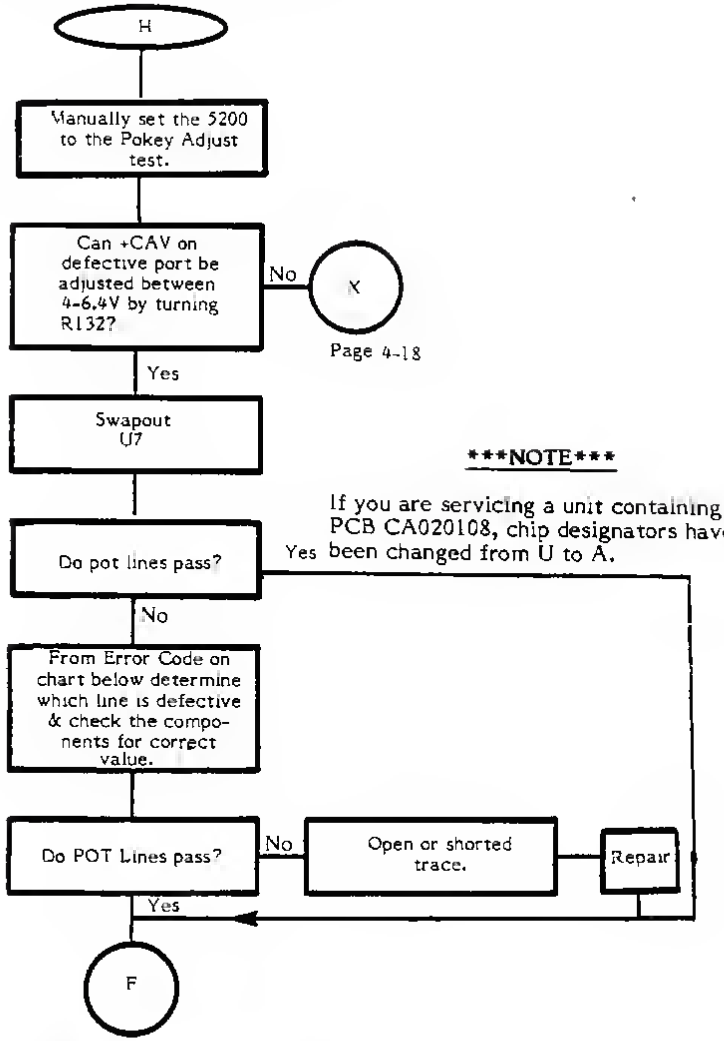

POT Line Error Code	Pokey Adjust Failure	Port and Pin #	Pokey U7 Pin #	CAP #1	CAP # 2	Resistor
22	HOR 1	1-10	14	C98	C106	R106
23	VERT 1	1-11	15	C97	C105	R110
24	HOR 2	2-10	12	C96	C104	R107
25	VERT 2	2-11	13	C95	C103	R111
26	HOR 3	3-10	10	C94	C102	R108
27	VERT 3	3-11	11	C93	C101	R112
28	HOR 4	4-10	8	C92	C100	R109
29	VERT 4	4-11	9	C91	C99	R113

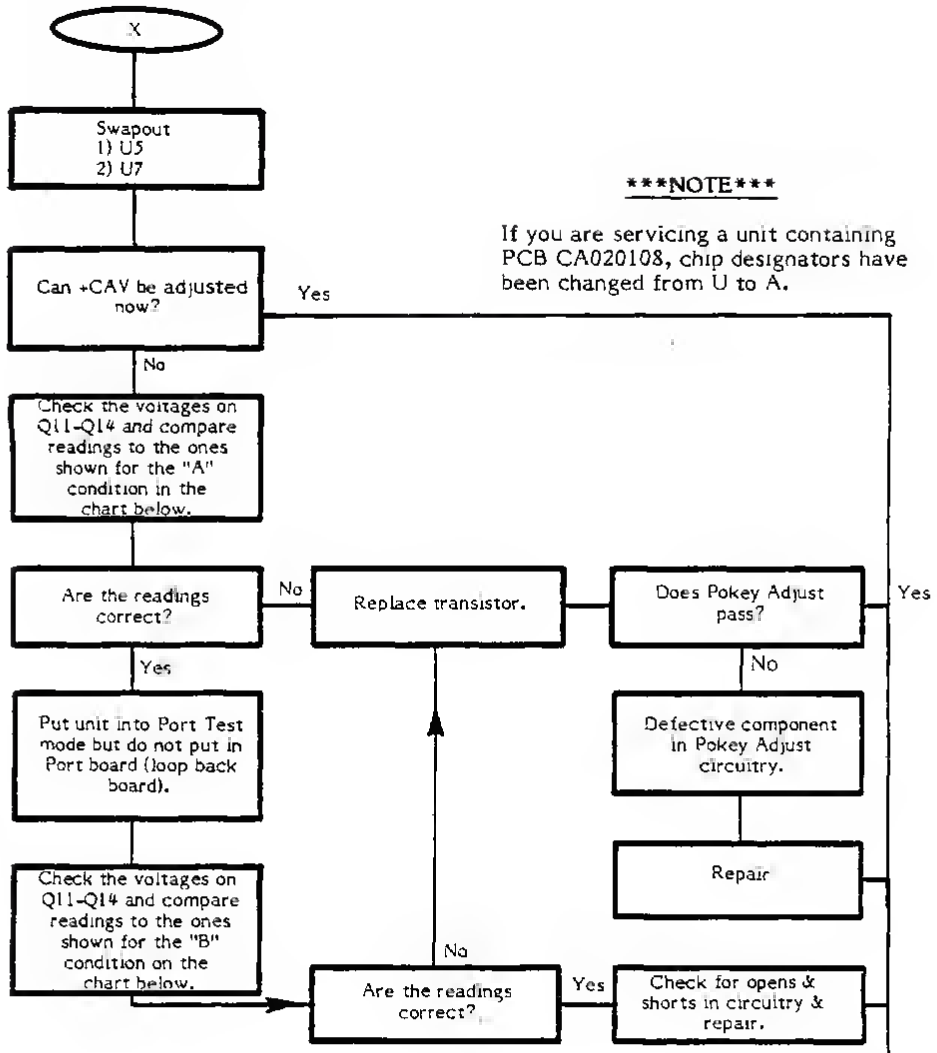

NOTE

If you are servicing a unit containing PCB CA020108, chip designators have been changed from U to A.

Condition/ Transistor	Q11 A	Q11 B	Q12 A	Q12 B	Q13 A	Q13 B	Q14 A	Q14 B
Emitter	13V	13V	3.2V	0V	0	0	3.2V	0V
Base	12V	13V	4V	0V	0	.7V	3.8V	0V
Collector	4-6.4V	0V	13V	13V	3.8V	0V	12V	13V

Trigger Line Troubleshooting
Bottom Fire Button

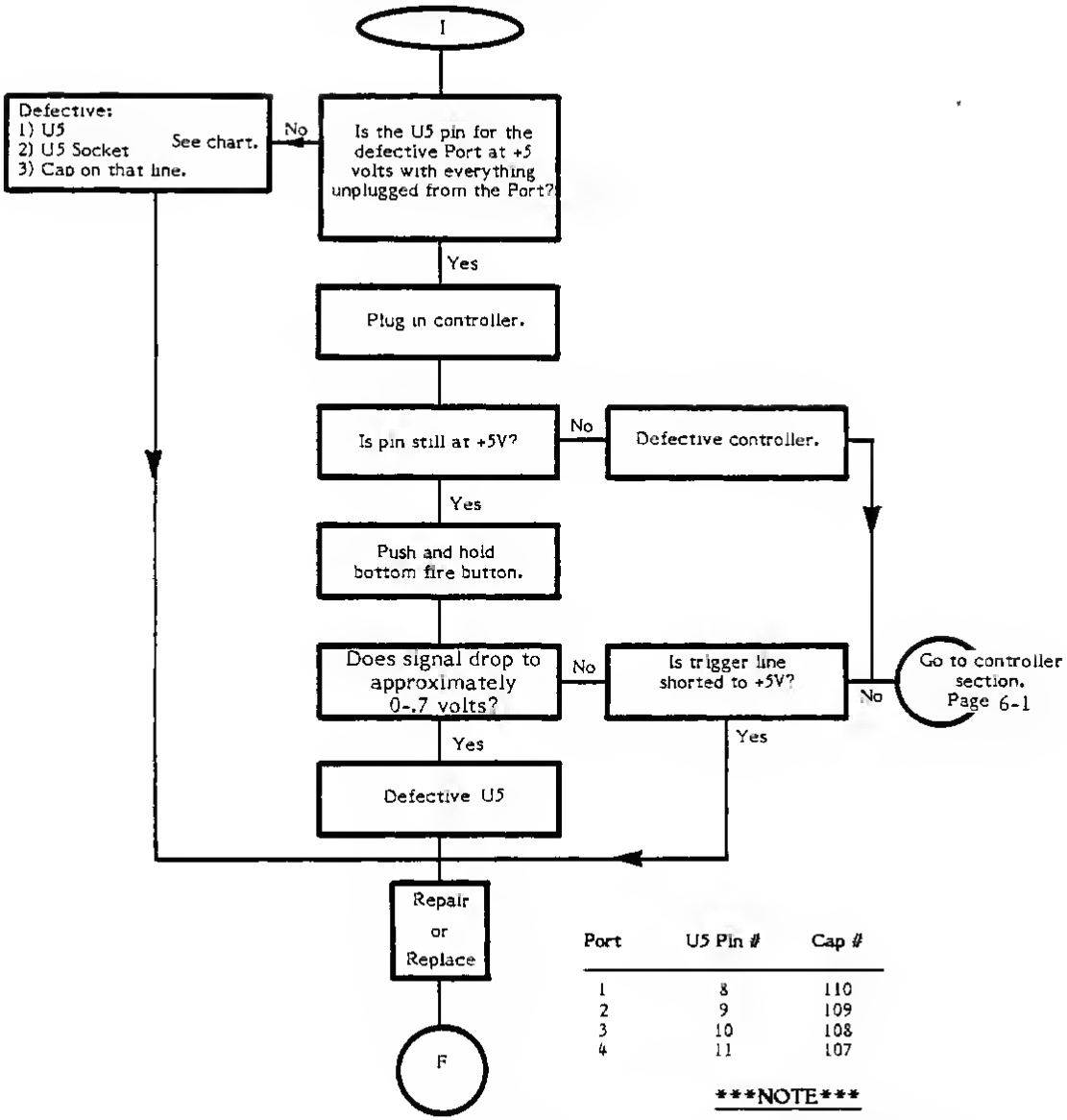

Port	U5 Pin #	Cap #
1	8	110
2	9	109
3	10	108
4	11	107

NOTE

If you are servicing a unit containing PCB CA020108, chip designators have been changed from U to A.

Softfire (Top Fire Button) Troubleshooting

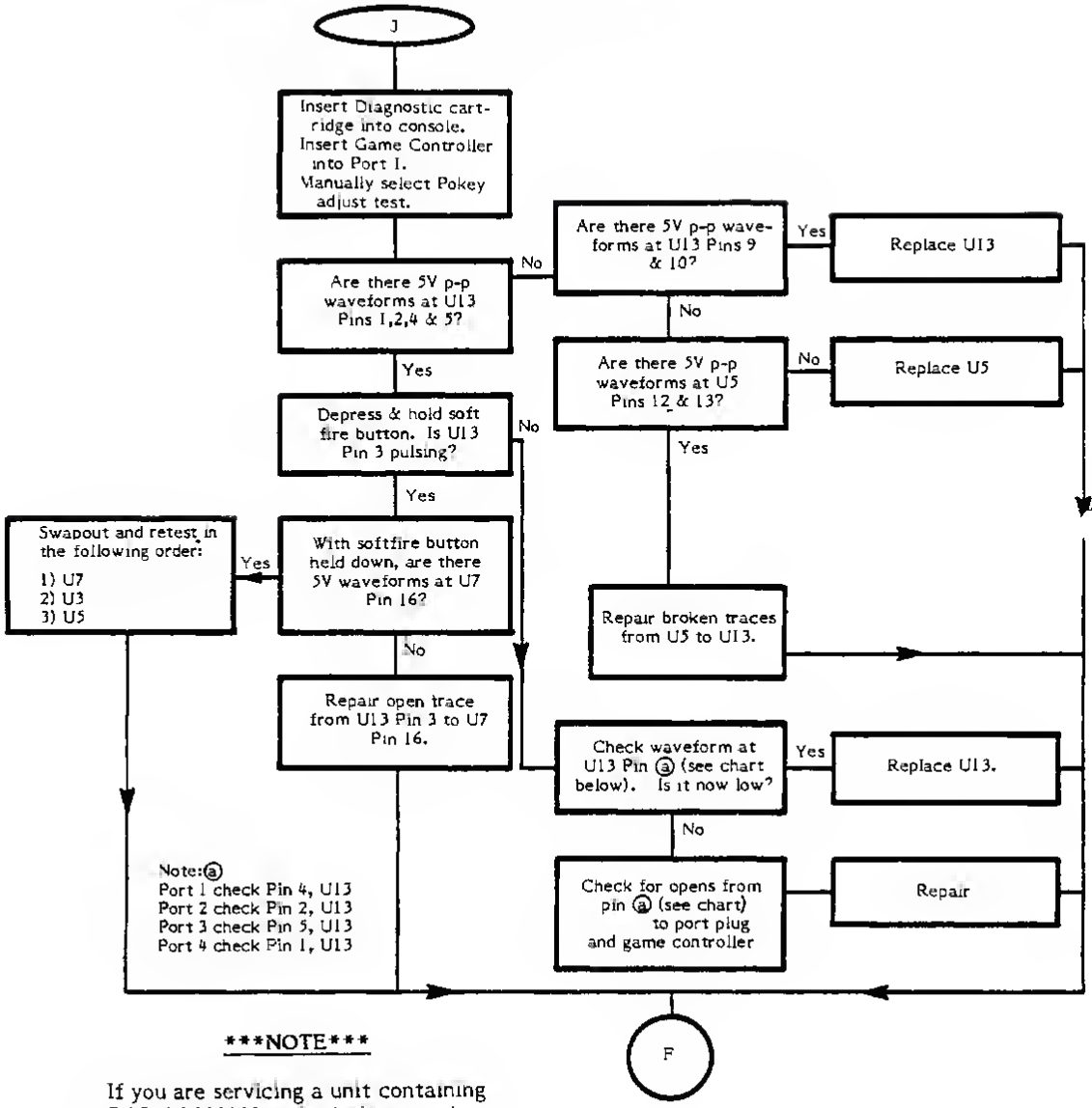

NOTE

If you are servicing a unit containing PCB CA020108, chip designators have been changed from U to A.

Keyboard Troubleshooting

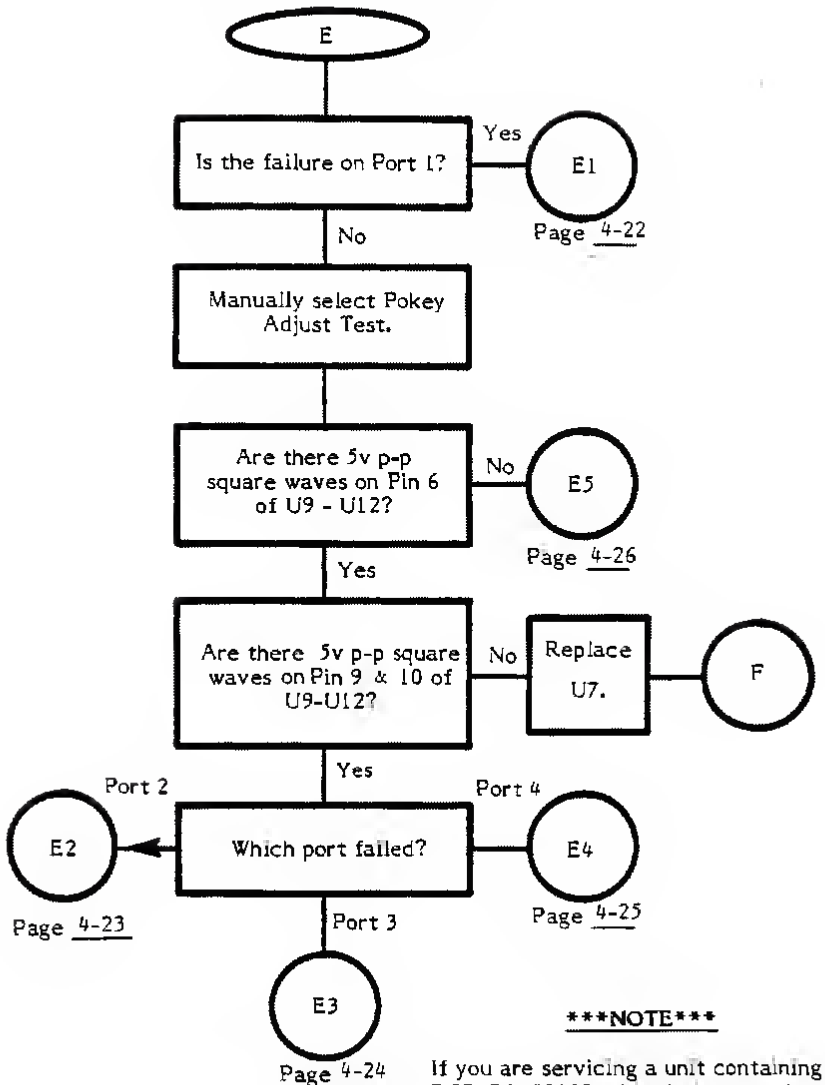

NOTE

If you are servicing a unit containing PCB CA020108, chip designators have been changed from U to A.

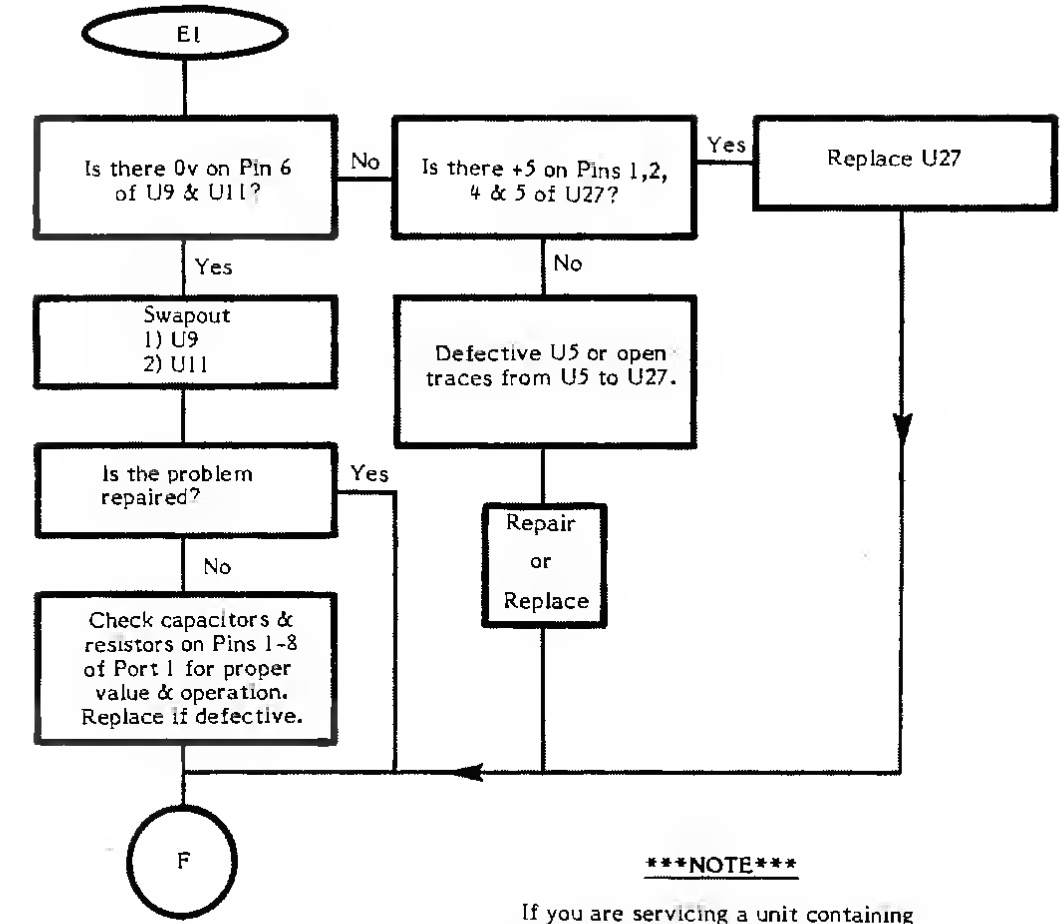

NOTE

If you are servicing a unit containing PCB CA020108, chip designators have been changed from U to A.

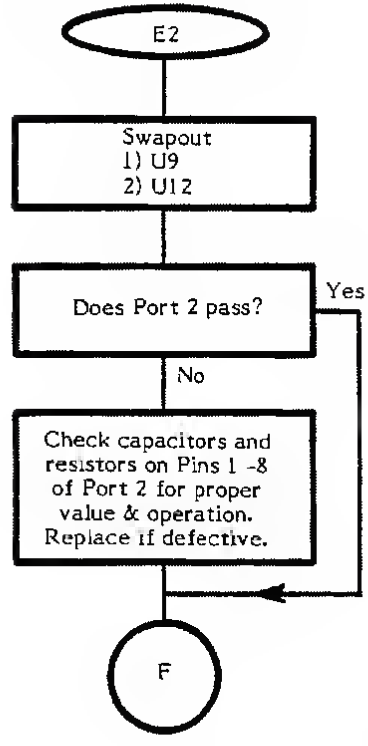

NOTE

If you are servicing a unit containing PCB CA020108, chip designators have been changed from U to A.

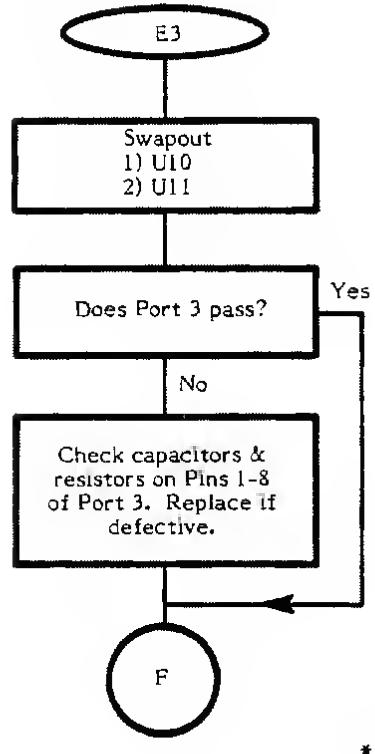

NOTE

If you are servicing a unit containing PCB CA020108, chip designators have been changed from U to A.

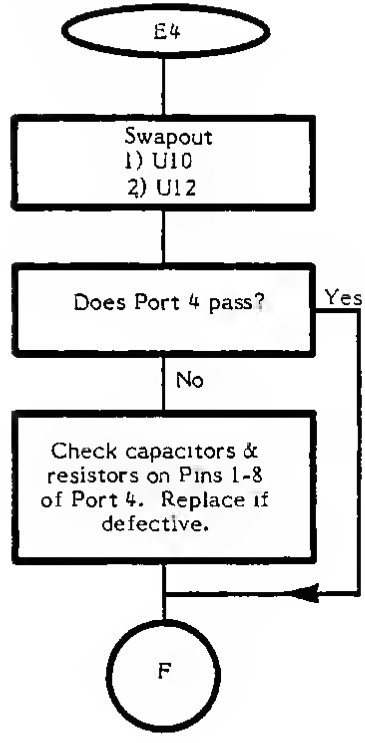

NOTE

If you are servicing a unit containing PCB CA020108, chip designators have been changed from U to A.

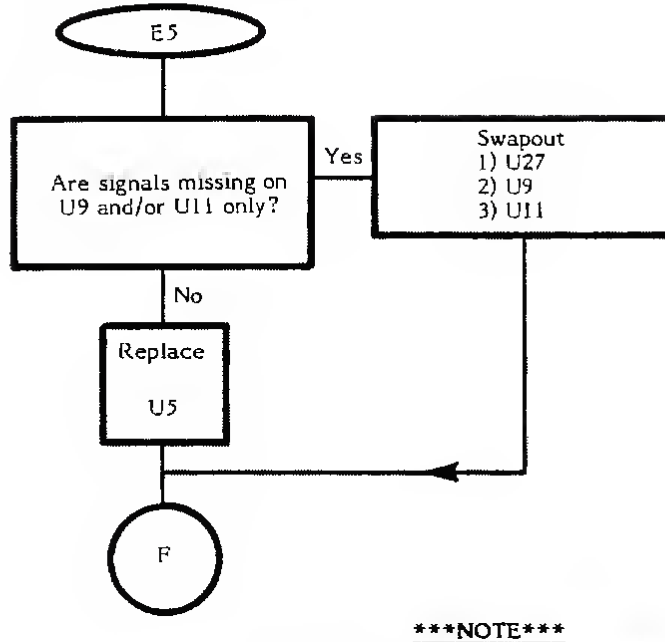

NOTE

If you are servicing a unit containing PCB CA020108, chip designators have been changed from U to A.

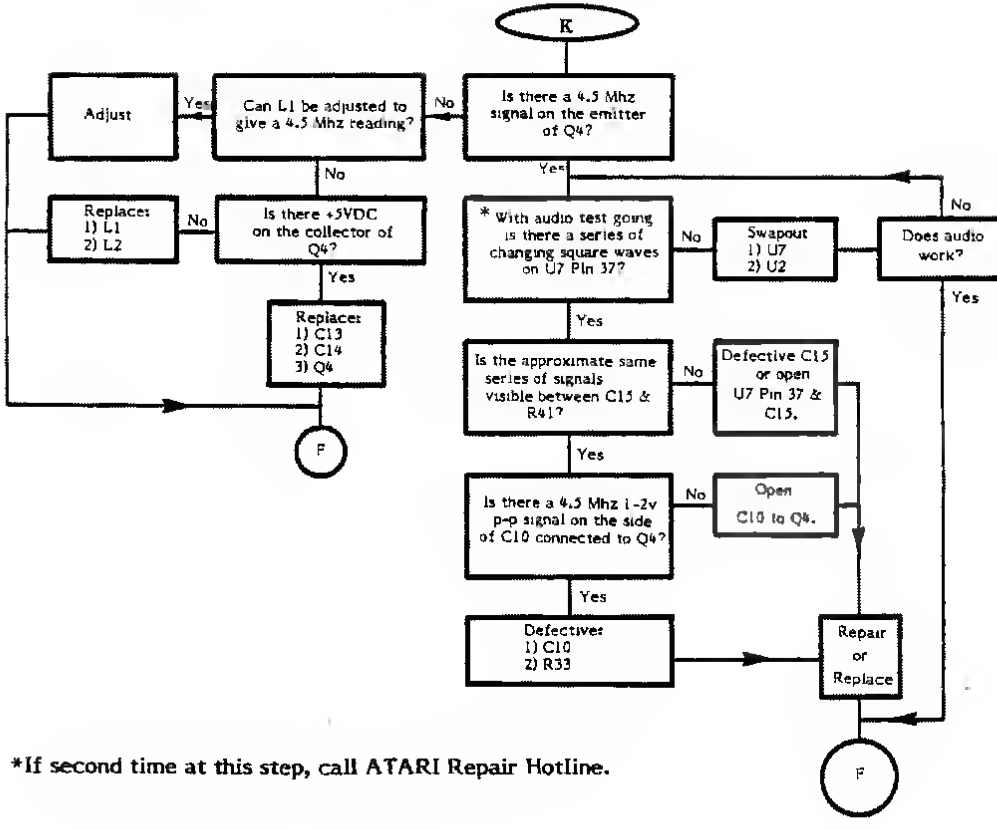

*If second time at this step, call ATARI Repair Hotline.

NOTE

If you are servicing a unit containing PCB CA020108, chip designators have been changed from U to A.

SECTION 4A

2-PORT 5200 DIAGNOSTIC FLOWCHART

The Diagnostic Flowchart is intended to be easy to use and the primary aid when troubleshooting the 2-Port 5200. Follow the prompts in the order presented. When a question is asked, follow the line from the box that best applies to your unit's condition. When that line terminates with a letter inside a circle, locate the letter on a different page and continue the diagnosis. The flowchart leaves nothing to chance; it tells you when to perform a specific test and when to replace components.

SWAPOUT PROCEDURE

At many places in the diagnostic flowchart, a box tells you to "swapout" a component, a chip, or a number of chips in a particular order. The "swapout" instruction means that you should replace the indicated components (one at a time) with known-good components of the same type. The unit should then be tested with the new, known-good component(s) in place to see whether the swapout solved the problem being checked. If the swapout did not fix the problem, leave the new chip in and swapout the next. Repeat this procedure for the rest of the components. Once the unit functions properly, reinstall the original IC's one by one to determine which are actually defective.

REPLACE IN ORDER

The "replace in order" instruction means that you should replace the components indicated in the order listed until the result called out in the previous block is obtained.

F - Some lines terminate with an **F** inside a circle. When this occurs, return to the beginning of the test sequence on page 3A-1.

N - Some lines terminate with an **N** inside a circle. When this occurs, call your Atari Repair Hotline.

Inside California
(800) 672-1466

Outside California
(800) 538-1535
(800) 538-1536

BLACK SCREEN TROUBLESHOOTING

IC #	+5	Gnd
A1	1	8
A2	8	1,21
A3	21	1
A5	27	3
A6	16	8
A7	17	1
A8	24	12
A9	16	8
A10	16	8
A11	16	8
A14	14	7
A15	14	7
A16	16	8
A17	16	8
A18	8	16
A19	8	16
A20	8	16
A21	8	16
A22	8	16
A23	8	16
A24	8	16
A25	8	16
A27	14	7

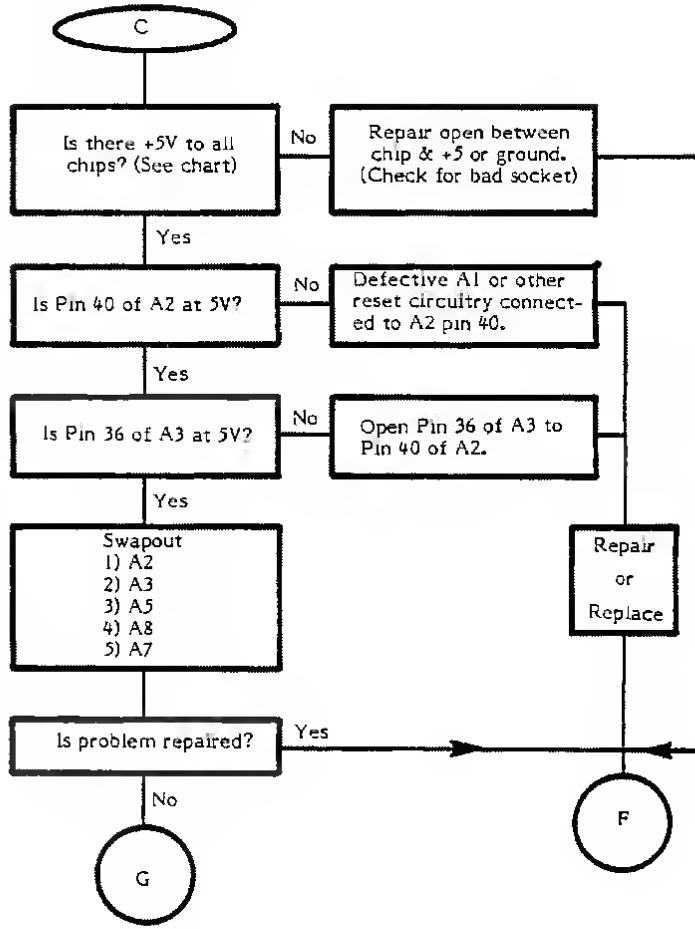

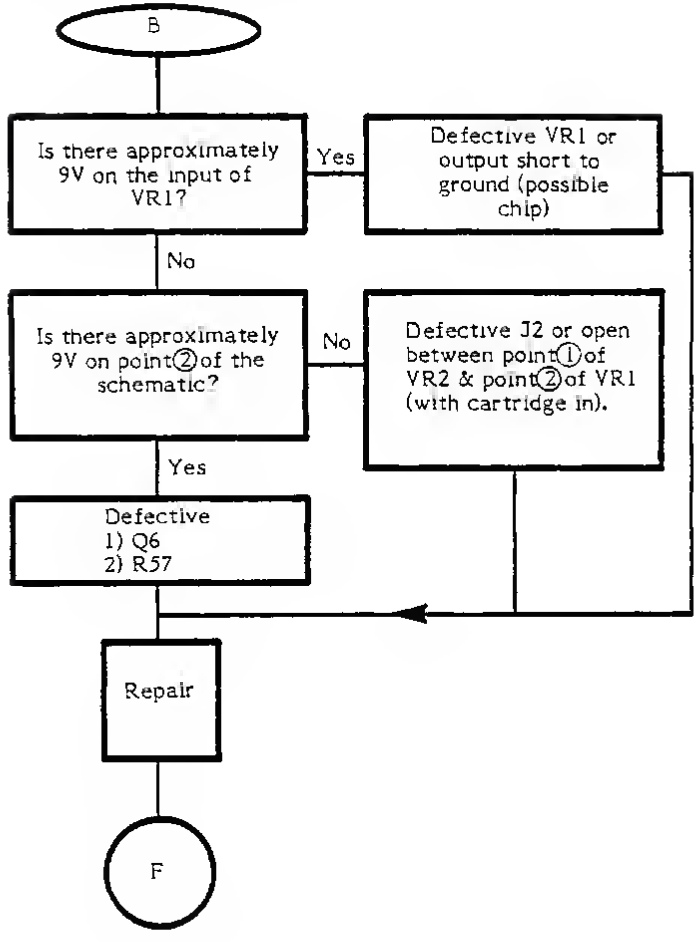

Changed by
ECN #0036
6/21/83

IC #	+5	Gnd
A1	1	8
A2	8	1,21
A3	21	1
A5	27	3
A6	16	8
A7	17	1
A8	24	12
A9	16	8
A10	16	8
A11	16	8
A14	14	7
A15	14	7
A16	16	8
A17	16	8
A18	8	16
A19	8	16
A20	8	16
A21	8	16
A22	8	16
A23	8	16
A24	8	16
A25	8	16
A27	14	7

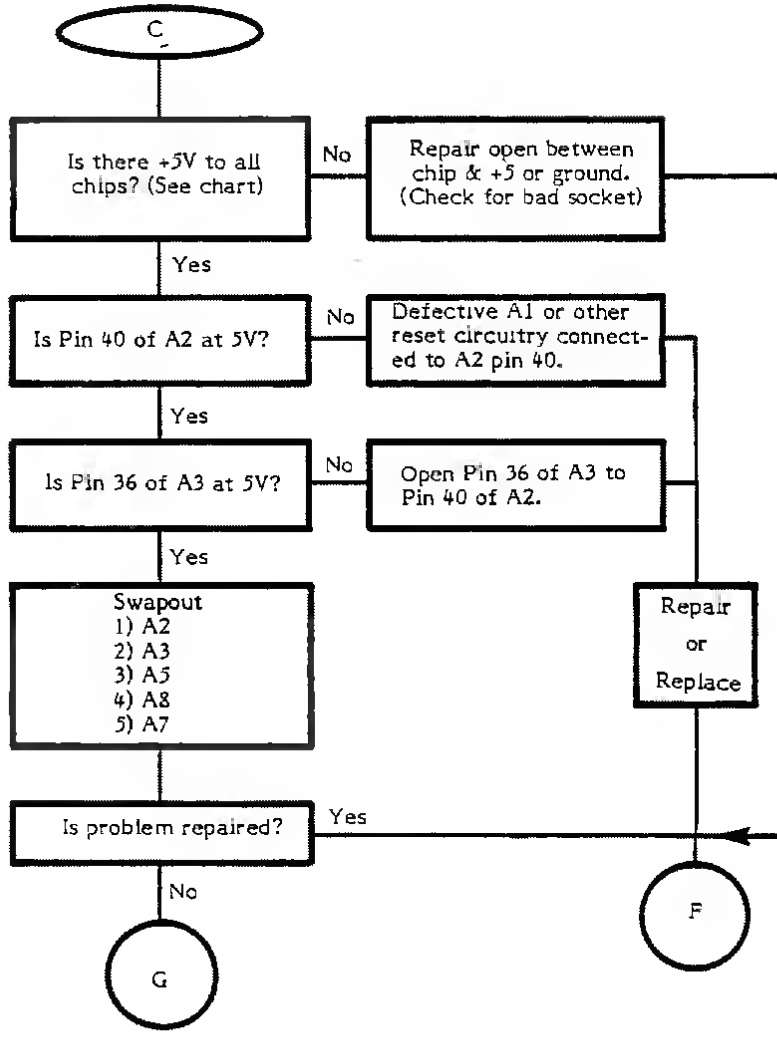

Note: Some 5200 2-port boards have pins 1,8,9,10 and 11 of A7 jumpered together on the solder side of the PCB. Future PCB's will incorporate this jumper. Do not add these jumpers to the 5200 2-port board.

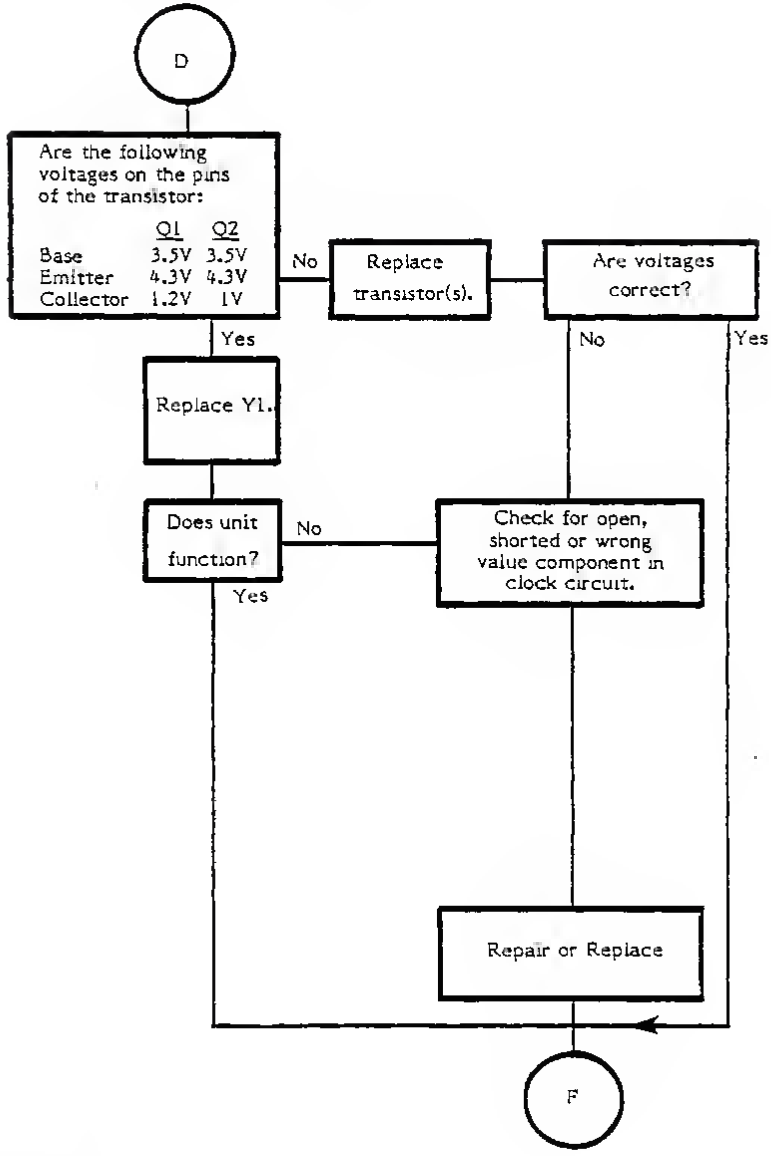

Changed by
ECN #0036
6/21/83

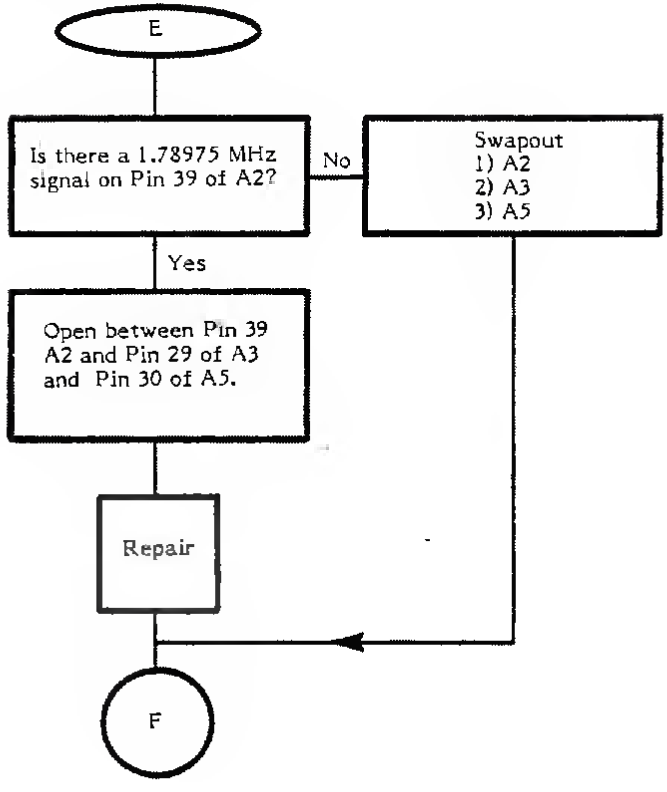
E
Is there a 1.78975 MHz signal on Pin 39 of A2?
No
Swapout
1) A2
2) A3
3) A5
Yes
Open between Pin 39 A2 and Pin 29 of A3 and Pin 30 of A5.
Repair
F

F

Whenever the flowchart directs you to F, return to the beginning of the testing procedure in Section 3. Proceed until another error is encountered and you are again directed to enter the flowchart or until the unit has proven to be fully operational.

Changed by
ECN #0036
6/21/83

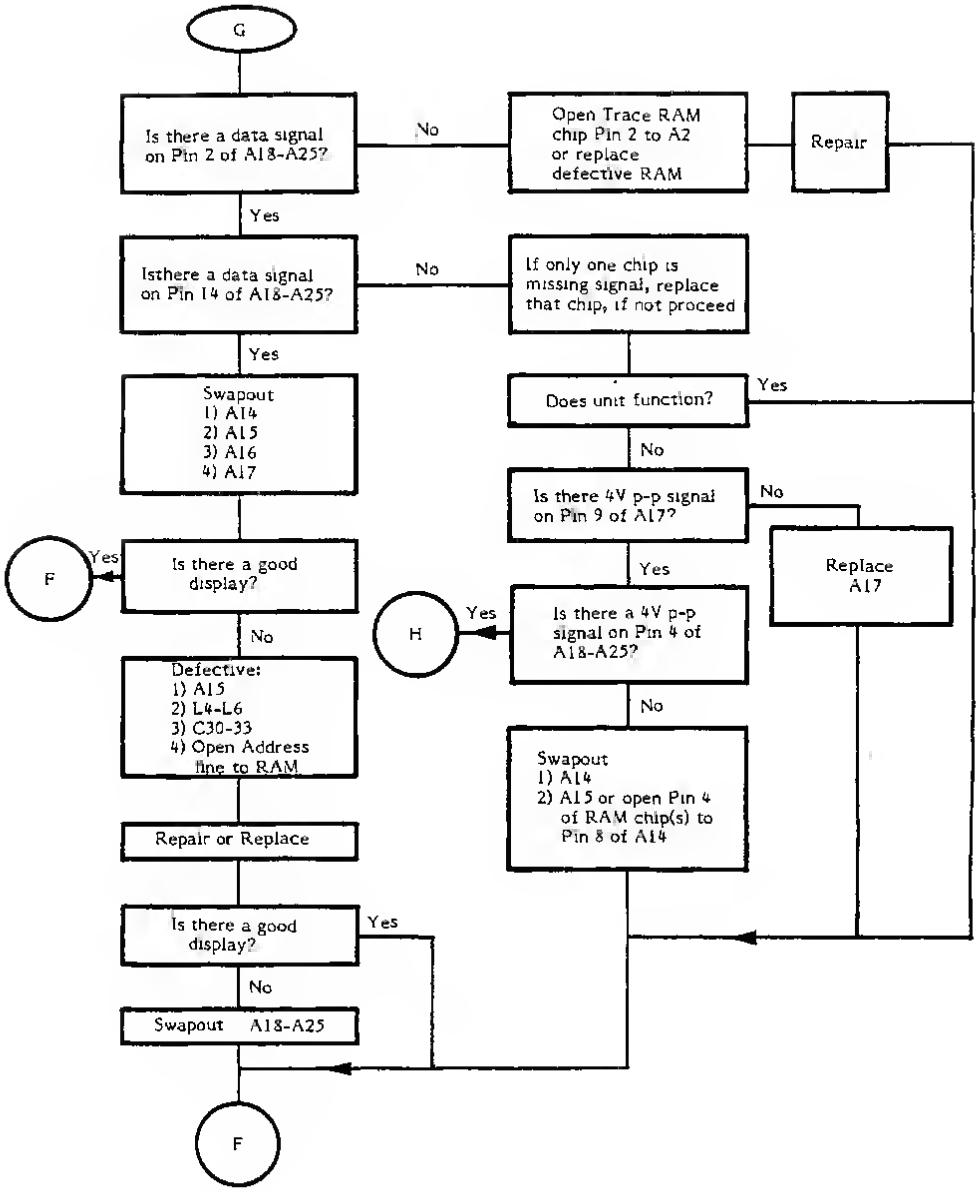
G
Is there a data signal on Pin 2 of A18-A25?
No
Open Trace RAM chip Pin 2 to A2 or replace defective RAM
Repair
Yes
Isthere a data signal on Pin 14 of A18-A25?
No
If only one chip is missing signal, replace that chip, if not proceed
Yes
Swapout
1) A14
2) A15
3) A16
4) A17
Does unit function?
Yes
No
Is there 4V p-p signal on Pin 9 of A17?
No
Replace A17
Yes
F
Yes
Is there a good display?
H
Yes
Is there a 4V p-p signal on Pin 4 of A18-A25?
No
Defective:
1) A15
2) L4-L6
3) C30-33
4) Open Address line to RAM
No
Swapout
1) A14
2) A15 or open Pin 4 of RAM chip(s) to Pin 8 of A14
Repair or Replace
Is there a good display?
Yes
No
Swapout A18-A25
F

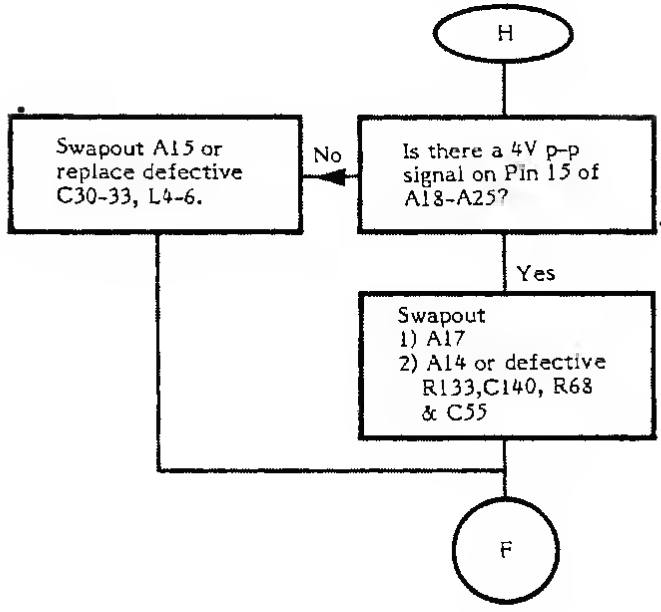

Changed by
ECN #0036
6/21/83

SNOWY SCREEN (POWER SUPPLY) TROUBLESHOOTING

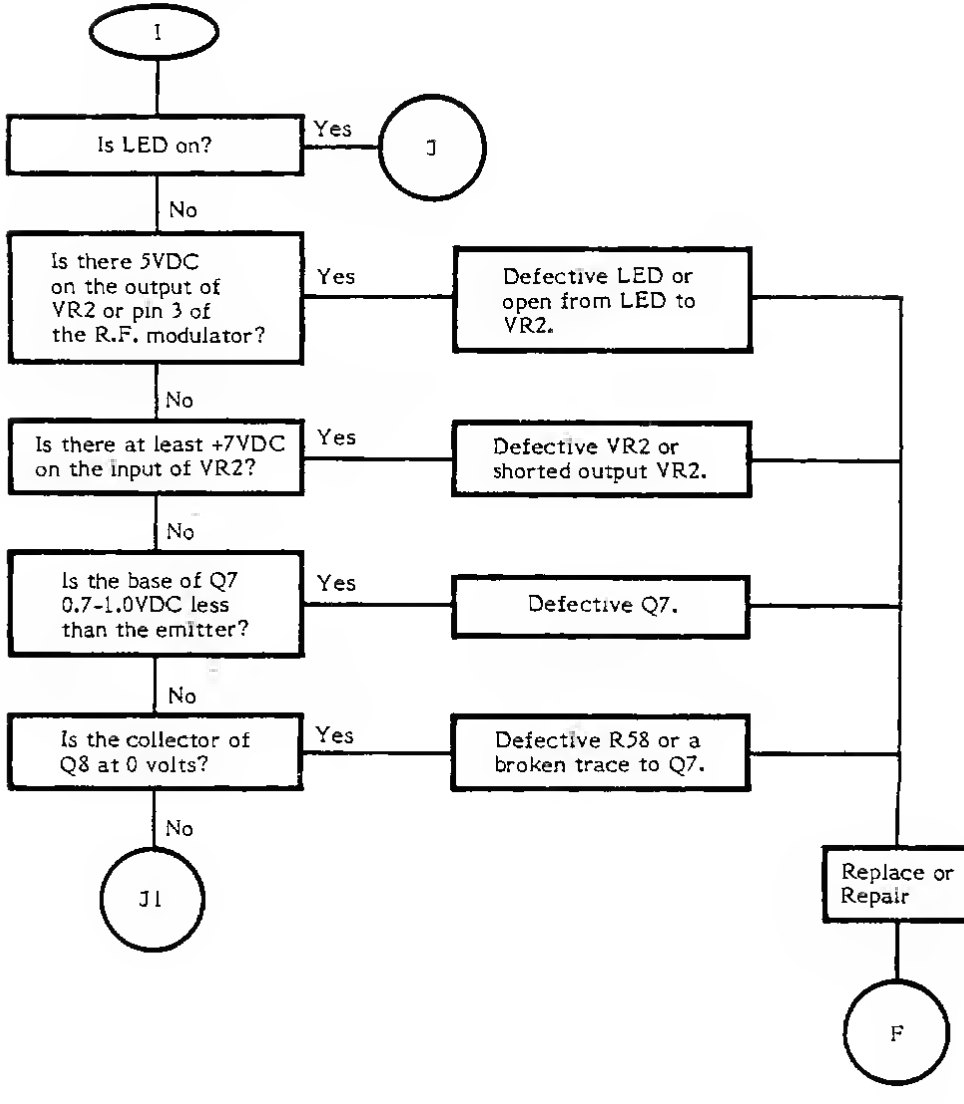

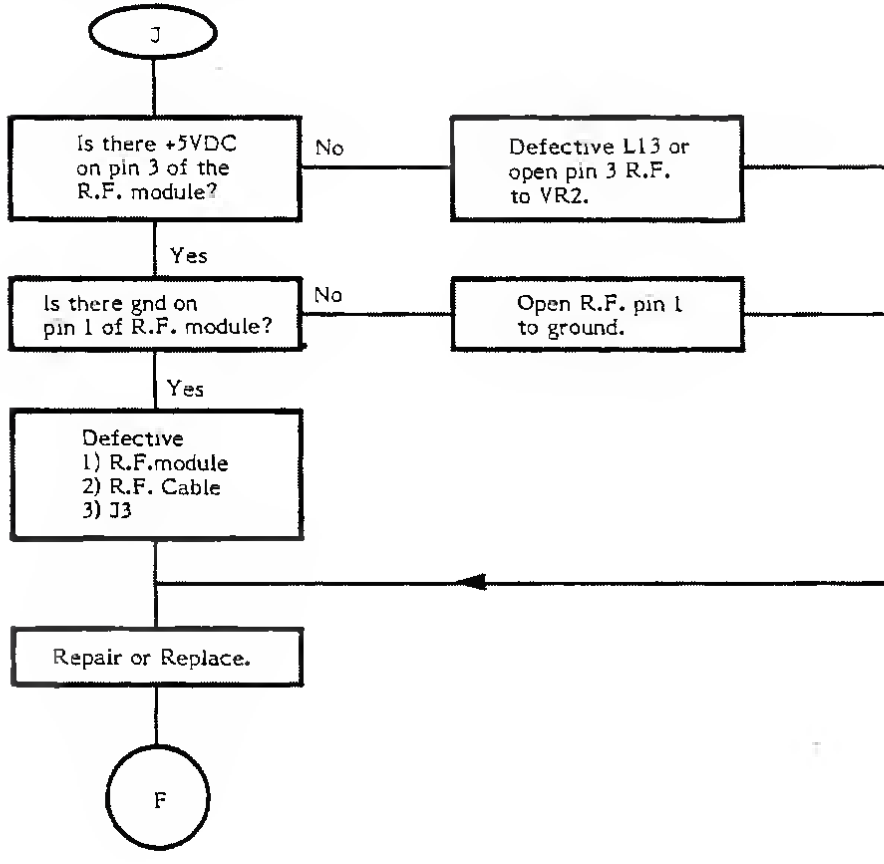

Changed by
ECN #0036
6/21/83

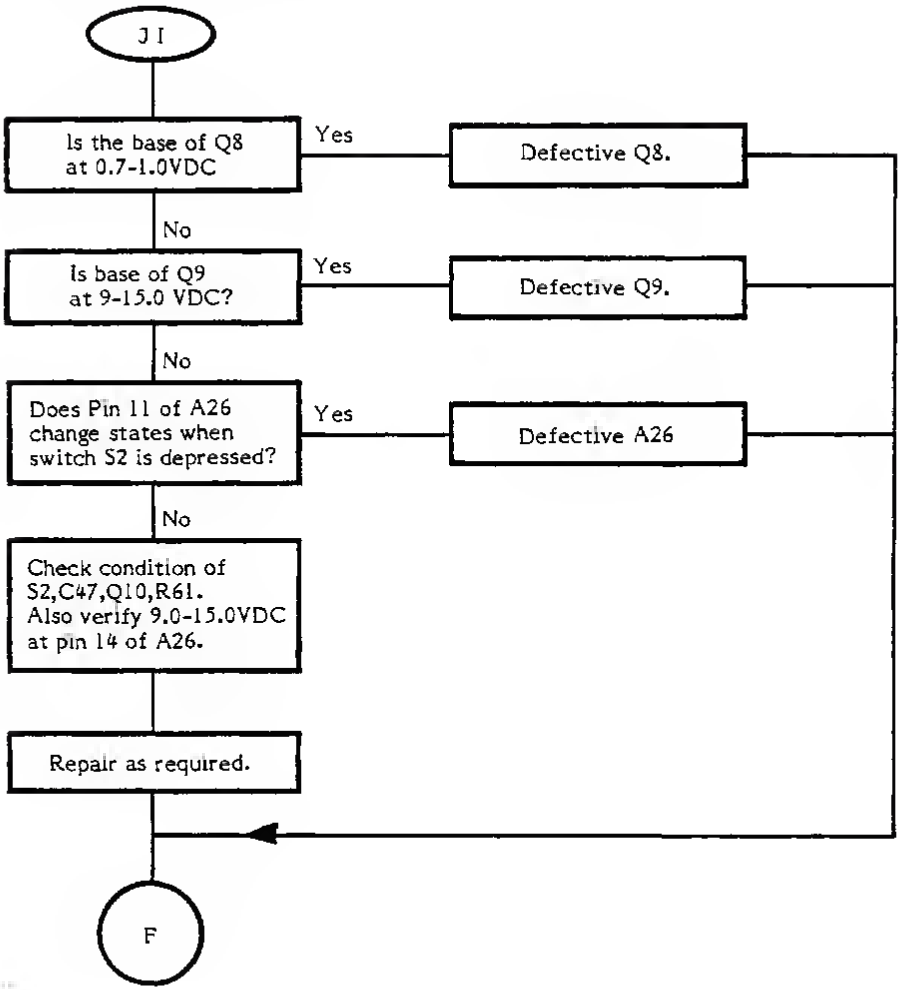
J I
Is the base of Q8 at 0.7-1.0VDC
Yes
Defective Q8.
No
Is base of Q9 at 9-15.0 VDC?
Yes
Defective Q9.
No
Does Pin 11 of A26 change states when switch S2 is depressed?
Yes
Defective A26
No
Check condition of S2,C47,Q10,R61. Also verify 9.0-15.0VDC at pin 14 of A26.
Repair as required.
F

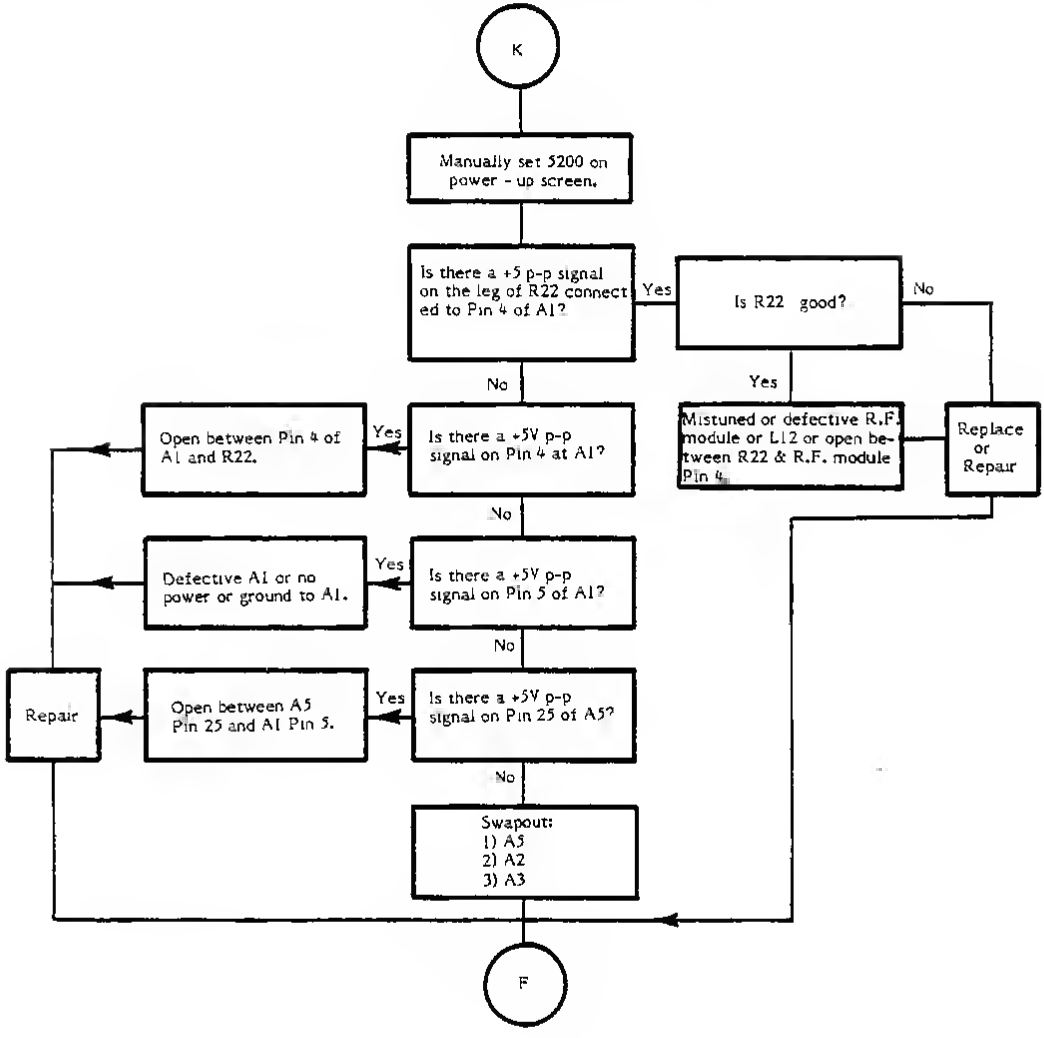
K
Manually set 5200 on power - up screen.
Is there a +5 p-p signal on the leg of R22 connected to Pin 4 of A1?
Yes
Is R22 good?
No
Yes
No
Open between Pin 4 of A1 and R22.
Yes
Is there a +5V p-p signal on Pin 4 at A1?
Mistuned or defective R.F. module or L12 or open between R22 & R.F. module Pin 4.
Replace or Repair
No
Defective A1 or no power or ground to A1.
Yes
Is there a +5V p-p signal on Pin 5 of A1?
No
Repair
Open between A5 Pin 25 and A1 Pin 5.
Yes
Is there a +5V p-p signal on Pin 25 of A5?
No
Swapout:
1) A5
2) A2
3) A3
F

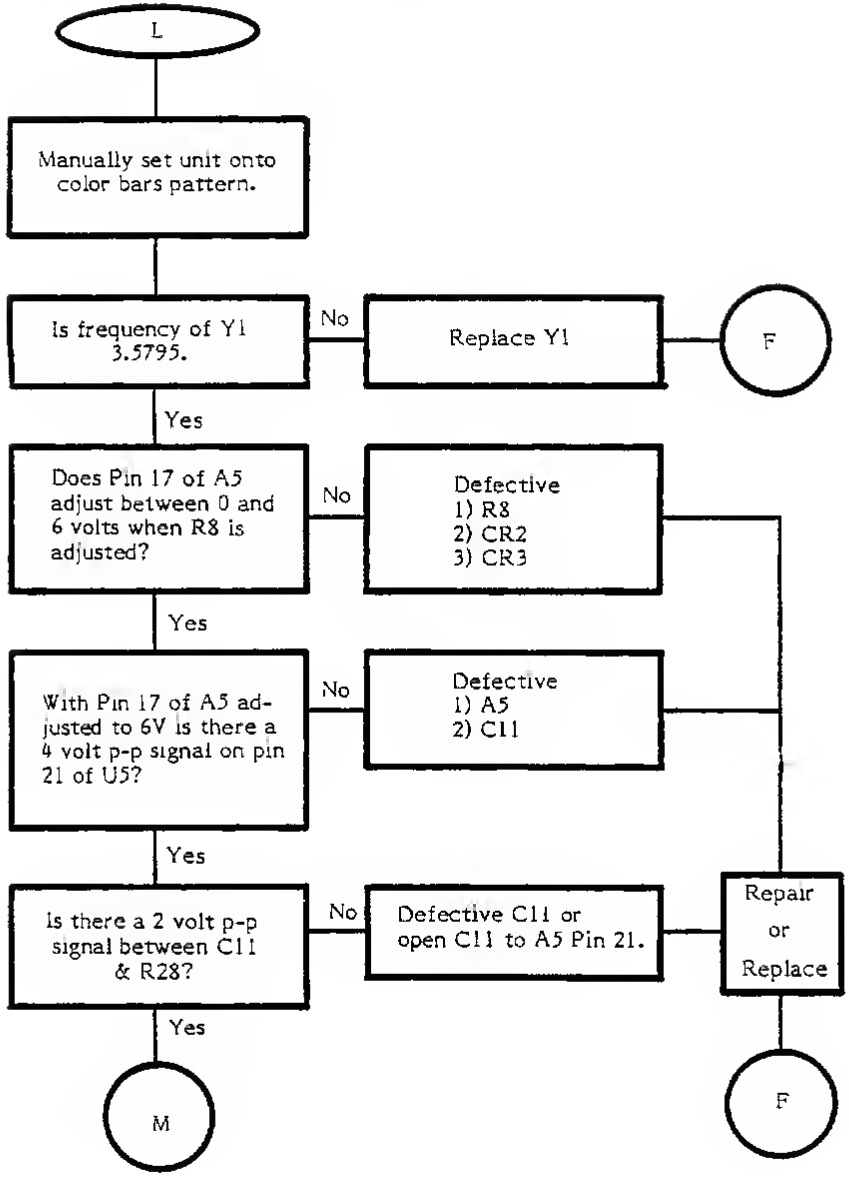
L
Manually set unit onto color bars pattern.
Is frequency of Y1 3.5795.
No
Replace Y1
F
Yes
Does Pin 17 of A5 adjust between 0 and 6 volts when R8 is adjusted?
No
Defective
1) R8
2) CR2
3) CR3
Yes
With Pin 17 of A5 adjusted to 6V is there a 4 volt p-p signal on pin 21 of U5?
No
Defective
1) A5
2) C11
Yes
Is there a 2 volt p-p signal between C11 & R28?
No
Defective C11 or open C11 to A5 Pin 21.
Repair or Replace
Yes
M
F

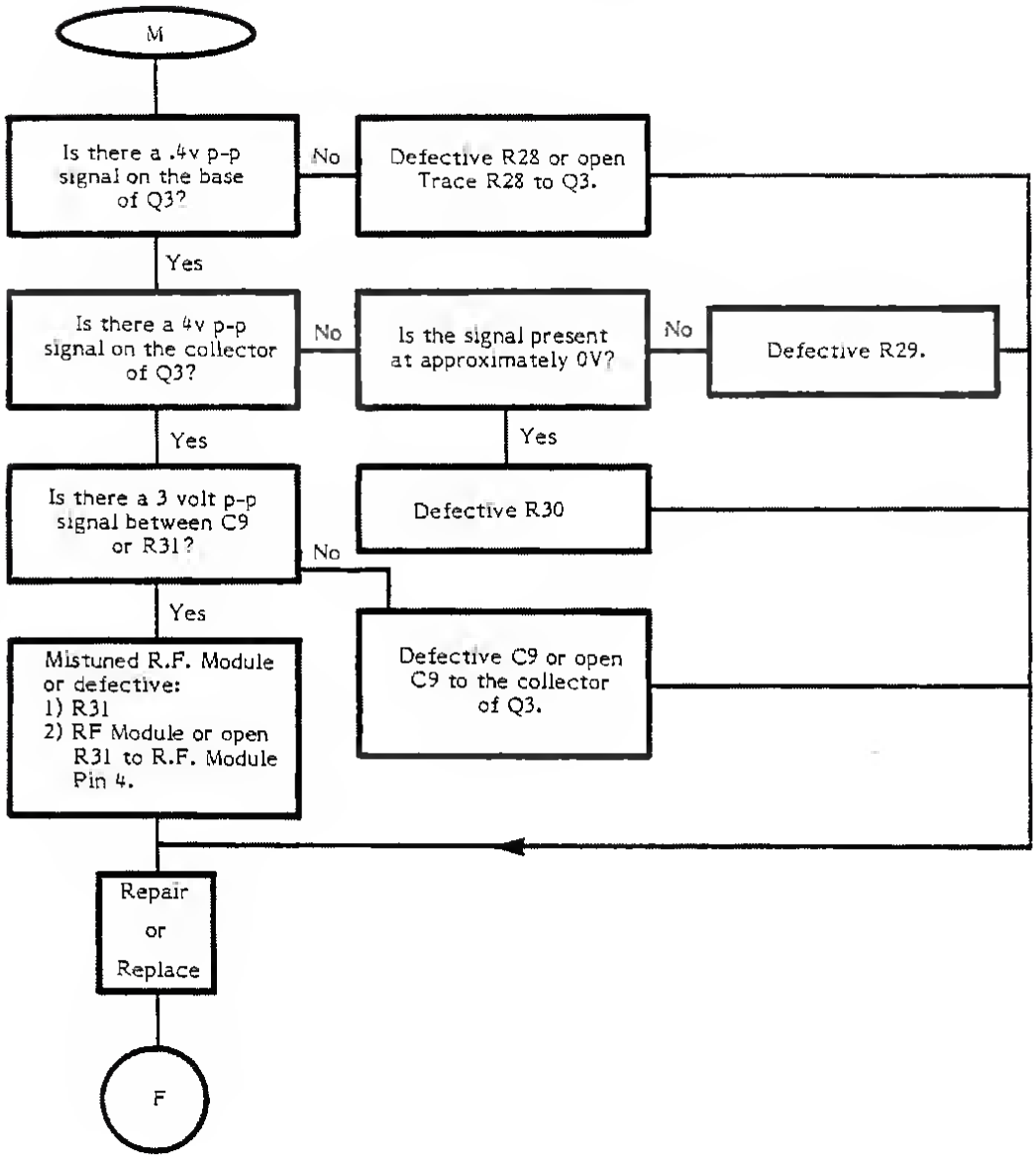
M
Is there a .4v p-p signal on the base of Q3?
No
Defective R28 or open Trace R28 to Q3.
Yes
Is there a 4v p-p signal on the collector of Q3?
No
Is the signal present at approximately 0V?
No
Defective R29.
Yes
Yes
Is there a 3 volt p-p signal between C9 or R31?
Defective R30
No
Yes
Mistuned R.F. Module or defective:
1) R31
2) RF Module or open R31 to R.F. Module Pin 4.
Defective C9 or open C9 to the collector of Q3.
Repair or Replace
F

GRAY BARS TROUBLESHOOTING

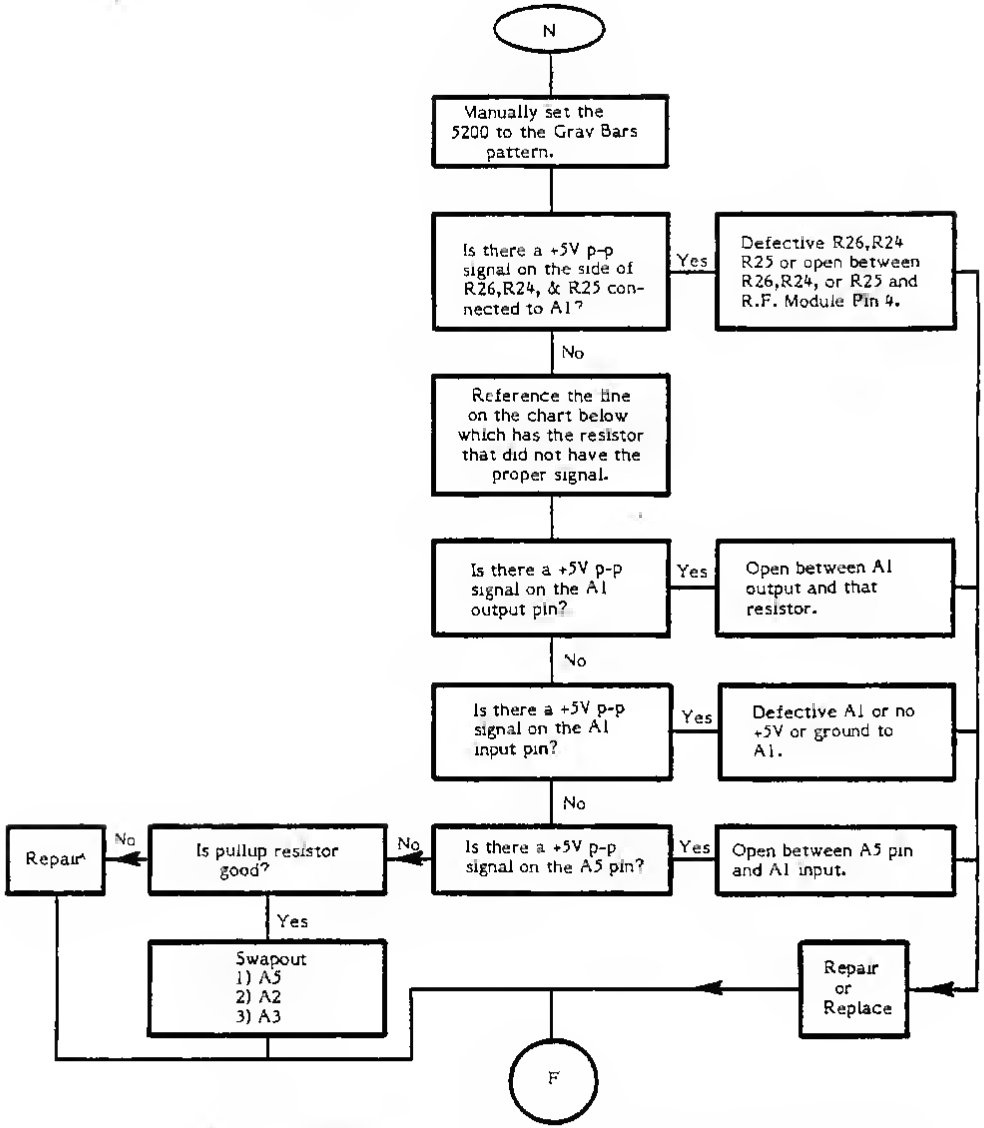

Line #	Resistor #	A1 Output	A1 Input	Pullup #	A5 Pin #
LM1*	R24	6	7	R19	22
LM2	R25	12	11	R20	23
LM3	R26	10	9	R21	24

*The 1.1 Diagnostic Cartridge does not test LM0.

AUDIO TROUBLESHOOTING

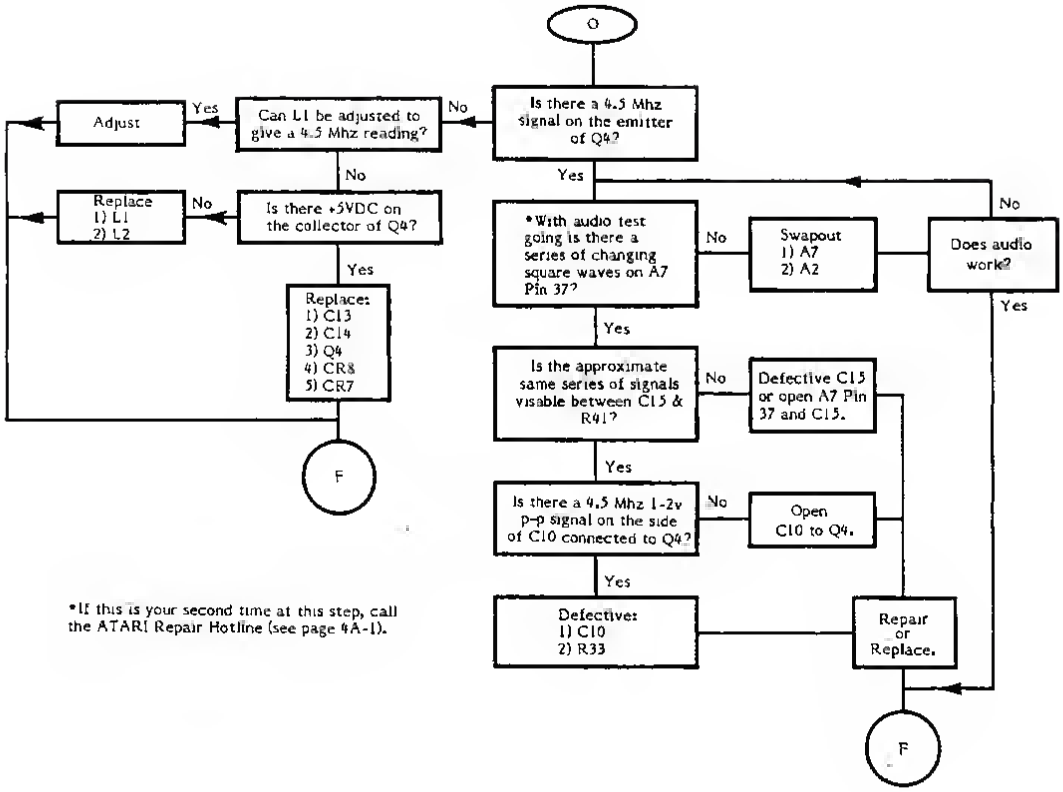

*If this is your second time at this step, call the ATARI Repair Hotline (see page 4A-1).

TRIGGER LINE (BOTTOM FIRE BUTTON) TROUBLESHOOTING

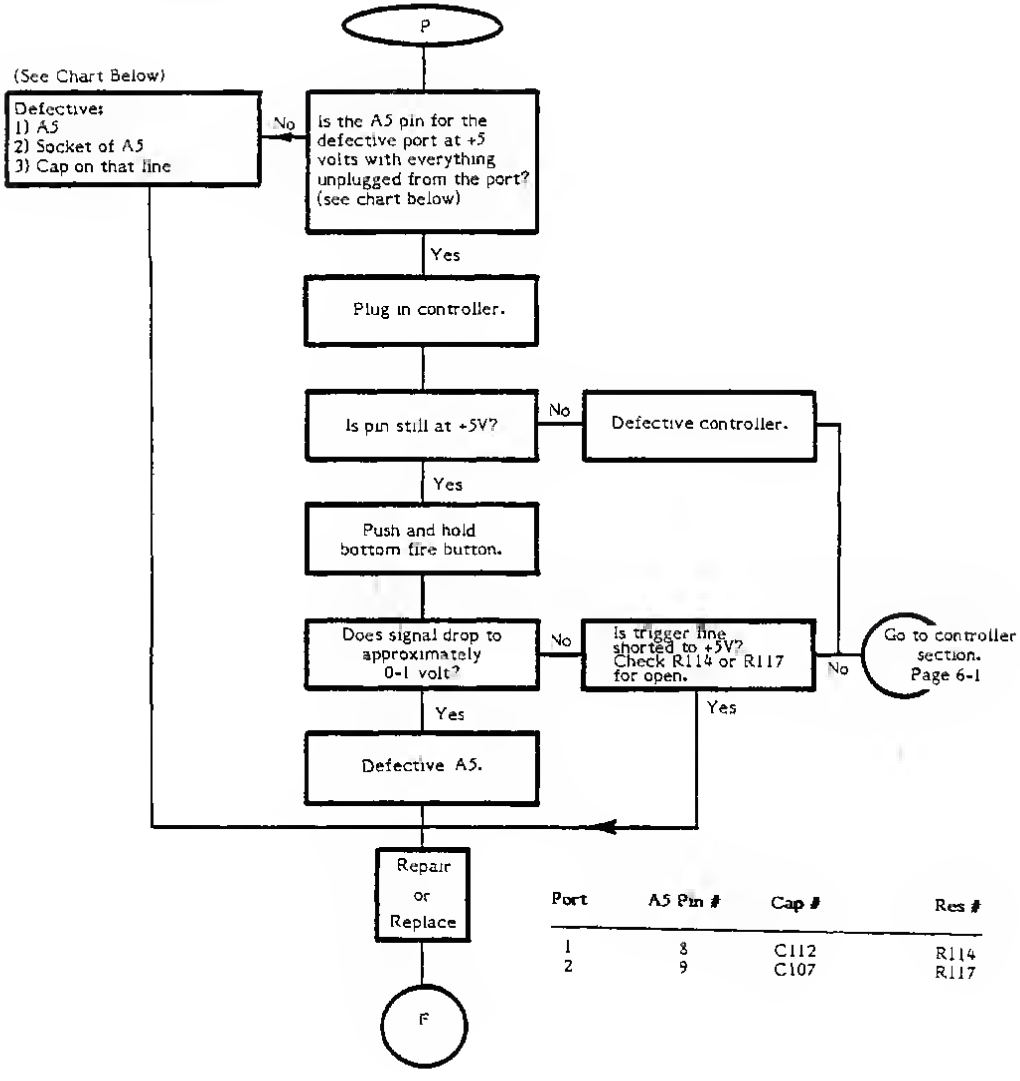

Port	A5 Pin #	Cap #	Res #
1	8	C112	R114
2	9	C107	R117

Note: Some 5200 2-port boards have pins 1,8,9,10 and 11 of A7 jumpered together on the solder side of the PCB. Future PCB's will incorporate this jumper. Do not add these jumpers to the 5200 2-port board.

SOFTFIRE (TOP FIRE BUTTON) TROUBLESHOOTING

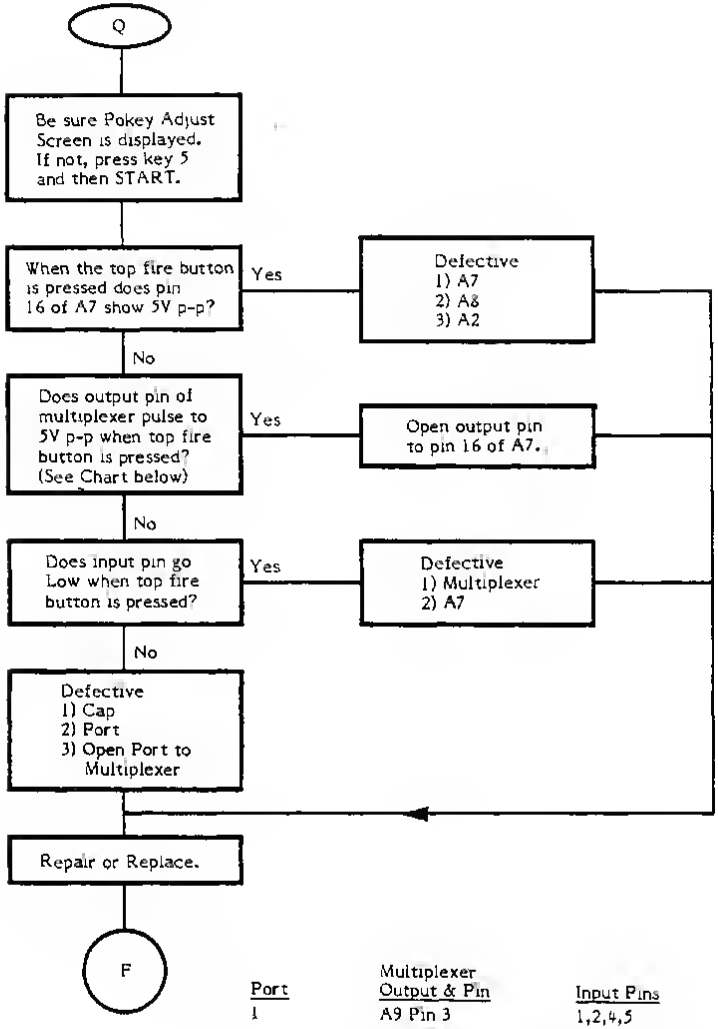

Port	Multiplexer Output & Pin	Input Pins
1	A9 Pin 3	1,2,4,5
2	A10 Pin 13	11,12,14,15

Note: Some 5200 2-port boards have pins 1,8,9,10 and 11 of A7 jumpered together on the solder side of the PCB. Future PCB's will incorporate this jumper. Do not add these jumpers to the 5200 2-port board.

POTENTIOMETER CONTROL LINE TROUBLESHOOTING

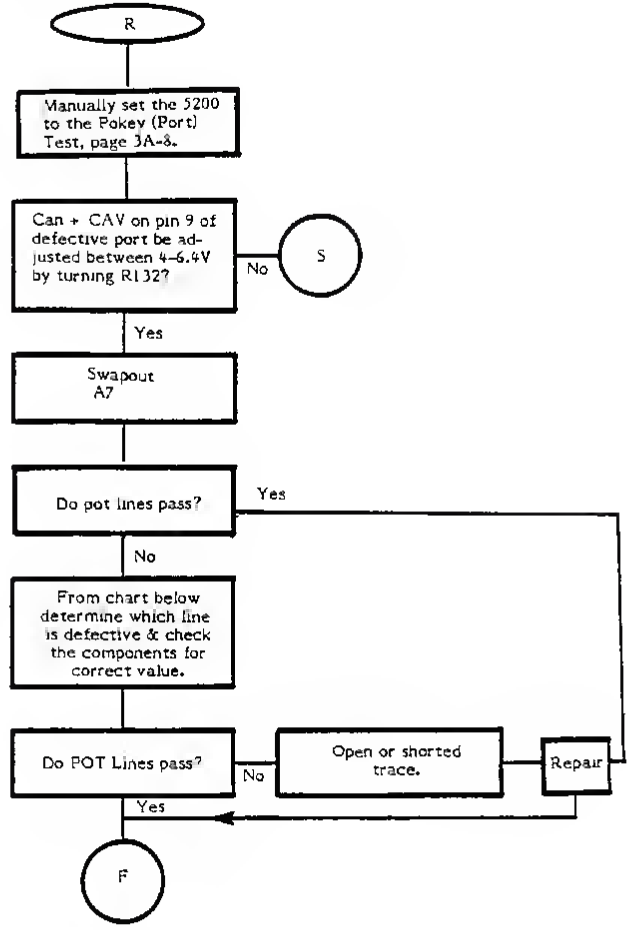

POT Line Error Code	Pokey Adjust Position	Port and Pin #	Pokey (A7) Pin #	CAP #1	CAP #2	Resistor
22	HOR 1	1-10	14	C98	C106	R106
23	VERT 1	1-11	15	C97	C105	R110
24	HOR 4	2-10	12	C92	C100	R109
25	VERT 4	2-11	13	C91	C99	R113

Note: Some 5200 2-port boards have pins 1,8,9,10 and 11 of A7 jumpered together on the solder side of the PCB. Future PCB's will incorporate this jumper. Do not add these jumpers to the 5200 2-port board.

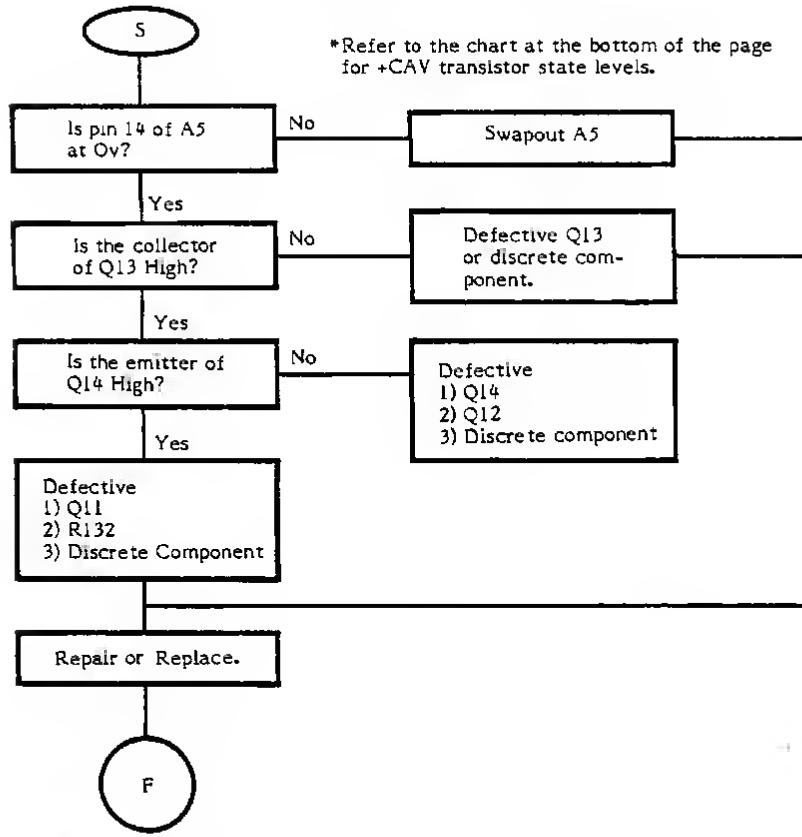

Condition/ Transistor	Q11 A	Q11 B	Q12 A	Q12 B	Q13 A	Q13 B	Q14 A	Q14 B
Emitter	13V	13V	3.2V	0V	0	0	3.2V	0V
Base	12V	13V	4V	0V	0	.7V	3.8V	0V
Collector	4-6.4V	0V	13V	13V	3.8V	0V	12V	13V

A: Pokey Adjust Selected
B: Other 1.1 tests (excluding Port Test)

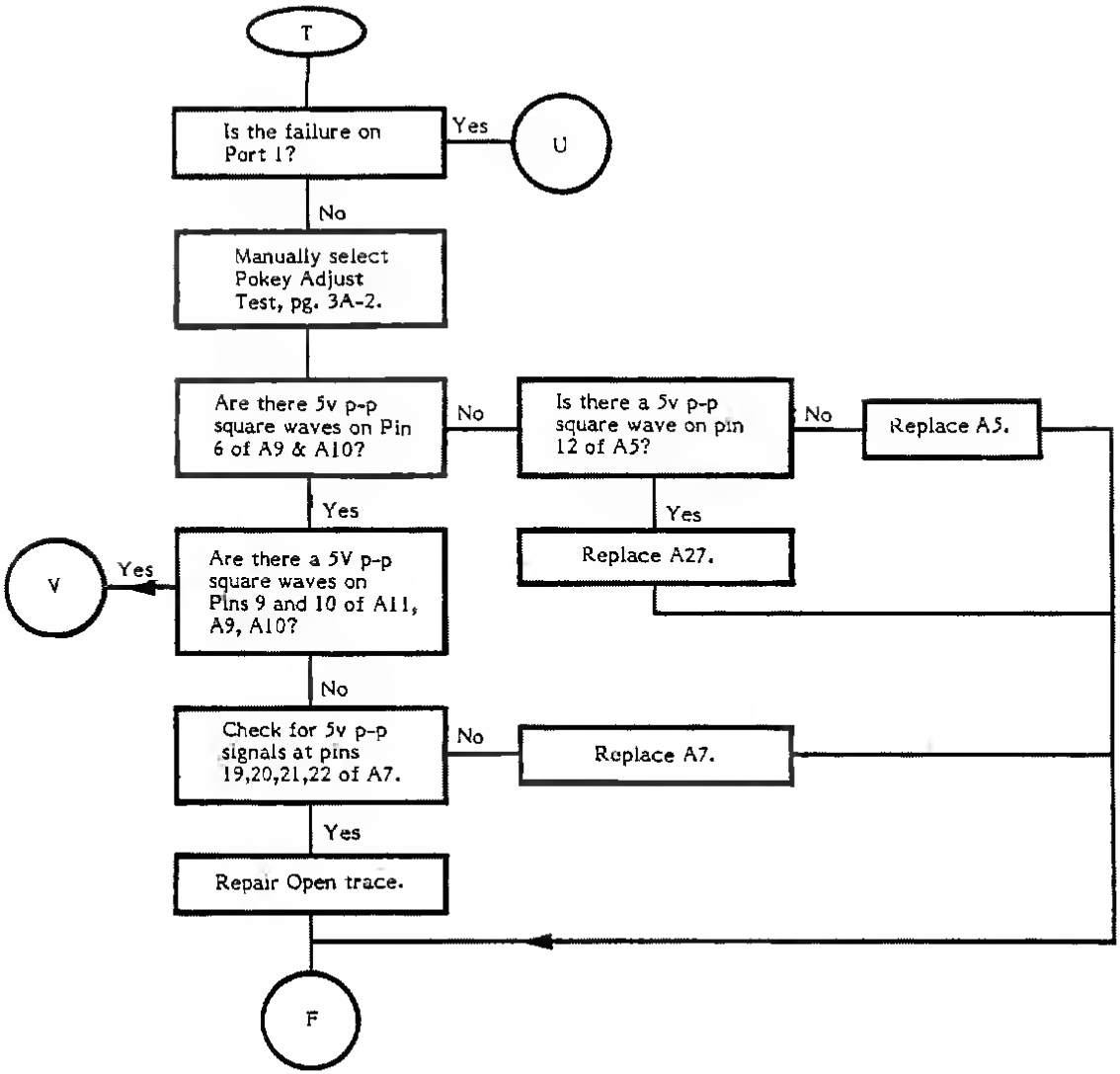

Note: Some 5200 2-port boards have pins 1,8,9,10 and 11 of A7 jumpered together on the solder side of the PCB. Future PCB's will incorporate this jumper. Do not add these jumpers to the 5200 2-port board.

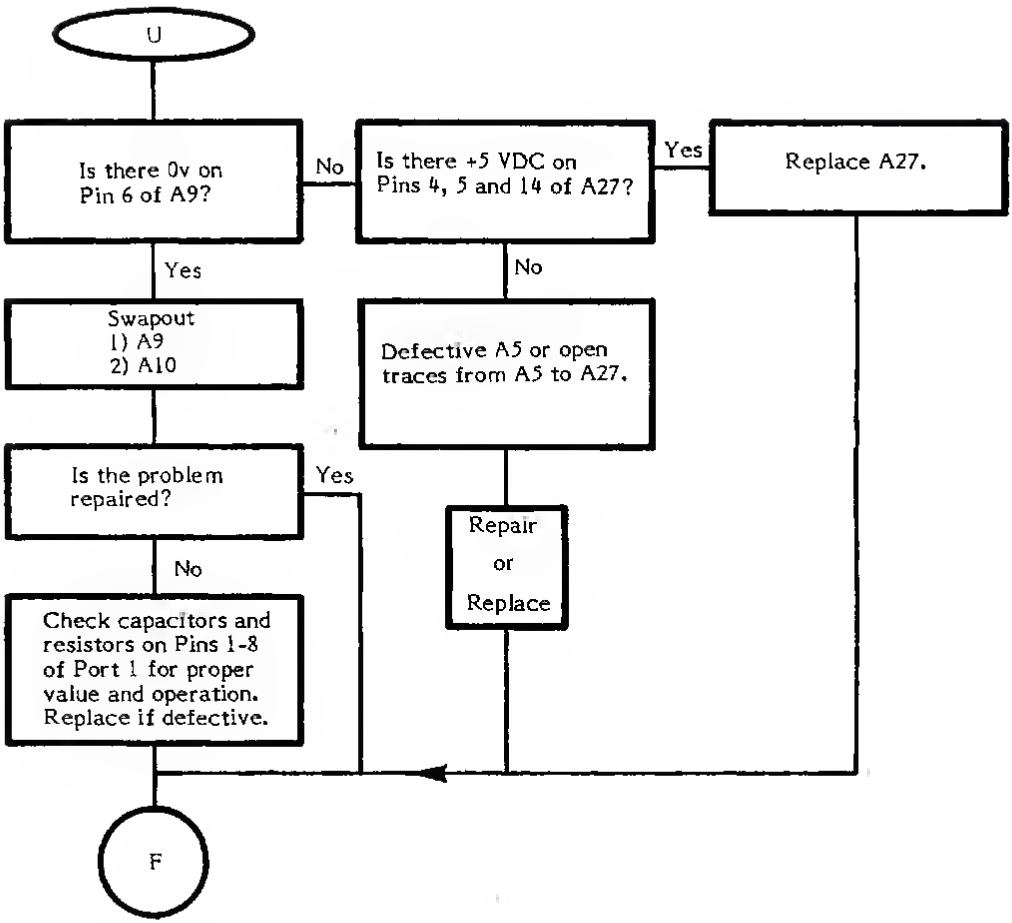

Changed by
ECN #0036
6/21/83

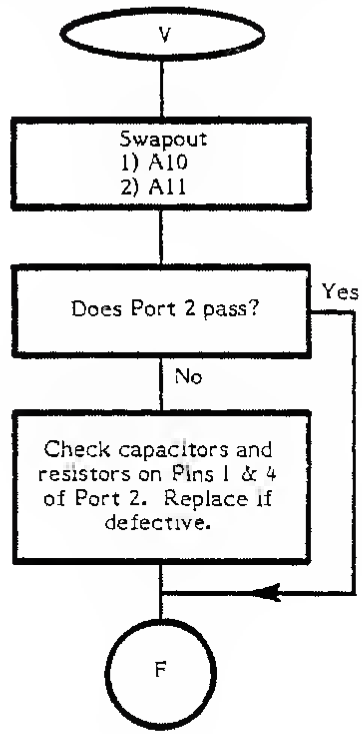
V
Swapout
1) A10
2) A11
Does Port 2 pass?
Yes
No
Check capacitors and resistors on Pins 1 & 4 of Port 2. Replace if defective.
F

SECTION 5

4-PORT 5200 SYMPTOM CHECKLIST

The Symptom Checklist is designed to assist the experienced technician arrive at a rapid diagnosis for model 5200 problems. The checklist is not intended to replace the Diagnostic Flowcharts as the primary troubleshooting guide, but rather, to supplement the flowchart. To save you time, Diagnostic Flowchart entry points are indicated on the checklist where applicable.

SOLID COLORED SCREEN

SYMPTOM	POSSIBLE CAUSES	FLOWCHART ENTRY POINT
Solid Colored Screen	U7,U2,U3,U5,Y1,Q1,Q2,VR1	Pg. 4-2
Vertically Lined Screen	J1,U2,U3,U5,U7 or open or shorted data or address line	Pg. 4-2
	VIDEO FAILURES	
Snowy Screen	VR2,U29(A26)* R.F. Module	Pg. 4-9
Warped Picture (Sync Loss)	RF Module,U1,U5, U3	Pg. 4-13
	COLOR FAILURES	
No Color	U5,Q3,C9,C11,Y1	Pg. 4-14
Weak Color	Q3,C11,C9,R29,R32	Pg. 4-14
	AUDIO FAILURES	
Audio Failures	U7,Q4,C14,C13,L1	Pg. 4-27
Only a Few Tones Fail	U7	Pg. 4-27

***U29 is chip designation on PCB #CA018087; A26 is chip designation on PCB #CA020108. If you are servicing a unit containing PCB CA020108, chip designators have been changed from U to A.**

Changed by
ECN #0036
6/21/83

4-PORT 5200 SYMPTOM CHECKLIST (Cont.)

CONTROLLER FAILURES

SYMPTOM	POSSIBLE CAUSES	FLOWCHART ENTRY POINT
Joystick does not work	PORT,U5,U7,C91-C106, R106-R113	Pg. 6-3
Keypad does not work	PORT,U9-U12	Pg. 6-4
Fire Button does not fire	PORT,U5,R114-R117,C107-C110	Pg. 4-20 or 4-21

NOTE
If you are servicing a unit containing PCB CA020108, chip designators have been changed from U to A.

SECTION 5A

2-PORT 5200 SYMPTOM CHECKLIST

The Symptom Checklist is designed to assist the experienced technician to arrive at a rapid diagnosis for 2-Port 5200 problems. The checklist is not intended to replace the Diagnostic Flowchart as the primary troubleshooting guide but to supplement the flowchart. To save you time, Diagnostic Flowchart entry points are indicated on the checklist where applicable.

SYMPTOM	POSSIBLE CAUSES	FLOWCHART ENTRY POINT
	SOLID COLORED SCREEN	
Solid Colored Screen	A7,A2,A3,A5,A7,Y1,Q1, Q2, VR1	Pg. 4A-2
Vertically Lined Screen	J1,A2,A3,A5,A7 or open or shorted data or address line	Pg. 4A-2
	VIDEO FAILURES	
Snowy Screen	VR2,A26, RF Module, Jack, Cable	Pg. 4A-10
Warped Picture (Sync Loss)	RF Module,A1,A5,A3	Pg. 4A-13
	COLOR FAILURES	
No Color	A5,Q3,C9,C11,Y1	Pg. 4A-14
Weak Color	Q3,C11,C9,R29,R32	Pg. 4A-14
	AUDIO FAILURES	
Audio Failures	A7,Q4,C14,C13,L1	Pg. 4A-17
Only a Few Tones Fail	A7	Pg. 4A-17

Changed by ECN #0036 6/21/83

2-PORT MODEL 5200 SYMPTOM CHECKLIST (Cont.)

CONTROLLER FAILURES

SYMPTOM	POSSIBLE CAUSES	FLOWCHART ENTRY POINT
Joystick does not work	PORT,A5,A7,C91-C106, R106-R113	Pg. 6-3
Keypad does not work	PORT A7,A9-A11	Pg. 6-4
Bottom Fire Button does not fire	PORT,A5,R114-R117, C107-C110	Pg. 4A-18
Top (Softfire) Fire Button does not fire	PORT, A7,A8,A2 multiplexer.	Pg. 4A-19

SECTION 6

GAME CONTROLLER

The following pages contain descriptions, schematics and test procedures for the Model 5200 Game Controller.

Overview

The Model 5200 game controller consists of:

- The Joystick
- The Keypad
- The Fire Buttons
- The Select Buttons

Refer to Figure 6-1 for the following discussion of the game controller parts.

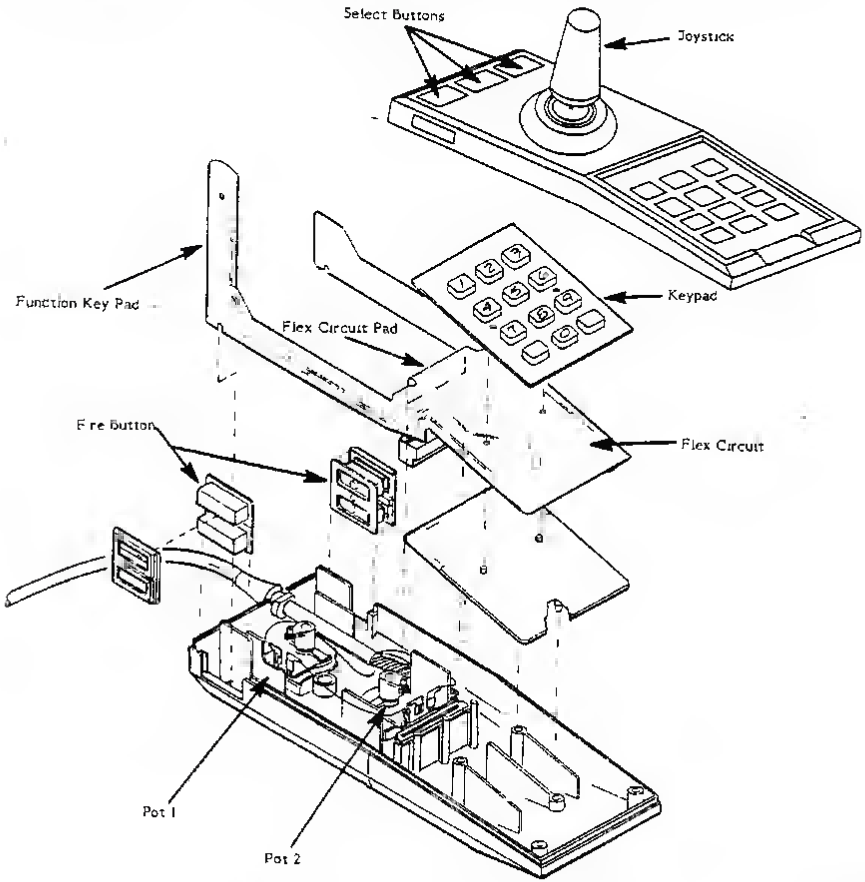

Figure 6-1. Model 5200 Game Controller.

Changed by ECN #0036 6/21/83

Joystick

The Joystick assembly contains two pots set in the bottom controller case. Two slides (actuator plates) in the top controller case move the pot arms into position when the player moves the joystick. NOTE: For proper operation, the pot arms must be aligned correctly. See Page 6-8 for Pot Arm Alignment Procedures.

The key pad, fire buttons and select buttons operate via a flex circuit.

Key Pad

The key pad is a series of 12 buttons which are used to enhance game play.

Fire Buttons

The game controller has two top fire buttons (one left, one right) and two bottom fire buttons (one left, one right). The bottom fire button (either side) is the one most frequently used.

Select Buttons

The Select Buttons and their functions are:

Start	-	starts the game being played.
Pause	-	temporarily stops the game during play.
Reset	-	permanently stops game play until the Start button is pressed.

Check the key pad functions using Page 6-3, **CONTROLLER TESTING USING THE 5200 CONSOLE.**

Check the top fire buttons by following the procedure for **CONTROLLER TESTING WITHOUT A 5200 CONSOLE** on page 6-5.

Check the bottom fire buttons by pressing them separately while in the POKEY ADJUST test. If they are working properly, the screen will display the selection menu.

If the fire buttons are found defective, use Page 6-6 ,**Failures,** to troubleshoot.

CONTROLLER TESTING USING THE 5200 CONSOLE

Equipment Needed:

- Known-good Model 5200 console (properly adjusted)
- Known-good Model 5200 controller
- Color T.V. set (properly adjusted)
- Diagnostic Cartridge (version 1.1)
- Ohmmeter

Procedure: (Using 1.1 Diagnostic Cartridge)

1) Set up the 5200 console with a TV, the 1.1 diagnostic cartridge inserted, and a known-good controller in port 1.

2) Press key 5 and then press START to bring up the Pokey Adjust Screen.

3) Remove the known-good controller and insert the controller to be tested into port 1.

4) Move the controller joystick to position 1, as illustrated in Figure 6-2 below. The readings on the screen should be less than 25 for Port 1 (Port 1 - Horizontal and Vertical).

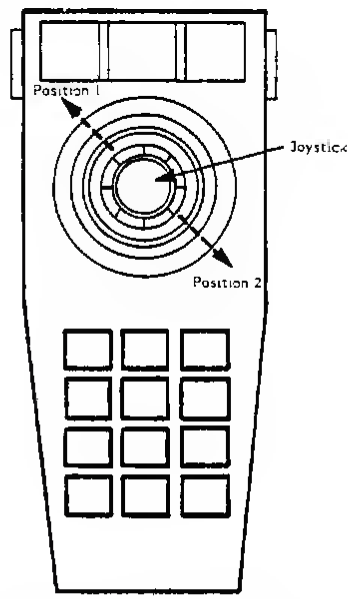

Figure 6-2. Joystick Positions 1 & 2

5) Move the controller joystick to position 2, as illustrated in Figure 6-2. The readings on the screen should be greater than 190 for port 1.

6) Slowly move the joystick back and forth between positions 1 and 2 and verify that the readings increase and decrease evenly on the screen. There should be no extreme or sudden changes.

7) Press the keys in the order given on the chart below. As you press each key, watch the screen to verify that the correct letter is displayed in the KB-1 column (see chart below).

KEY	KB-1 Readings
START	C
PAUSE	D
SELECT	E
1	1
2	2
3	3
4	4
5	5
6	6
7	7
8	8
9	9
*	A
0	0
#	B

If this test fails, go to Page 6-6, **FAILURES.**

8) Press one of the bottom fire buttons and the POKEY Adjust Screen should be replaced by the menu.

9) Select the POKEY Adjust Test again (Press 5 and then START).

10) Press the other bottom fire button and the POKEY Adjust Screen should be replaced by the menu.

If the fire buttons are defective, use the **FAILURES** section on page 6-6 to troubleshoot them.

To check the top fire buttons, go to Step 3 of the **CONTROLLER TEST WITHOUT A 5200 CONSOLE,** Page 6-5.

11) This concludes the controller test.

CONTROLLER TESTING WITHOUT A 5200 CONSOLE

Special Equipment Needed:

- An Ohmmeter

Procedure:

Use Figure 6-2 on Page 6-3 as reference for Steps 1 and 2.

1) Move the controller joystick to position 1. Use an Ohmmeter to determine the pot readings through the cable (cable connector Pins 11 & 9 and 10 & 9). The pot reading should be no greater than 50K ohms.

2) Move the controller joystick to position 2. The pot reading through the cable should be at least 430K ohms greater than in position 1 (cable connector pins 10 & 9 and 11 & 9).

3) To check the switches you must connect the leads of the ohmmeter to the pin numbers given below. Without the button depressed it should show infinite resistance (open circuit). With the button depressed it should show less than 50K ohms resistance. Be sure to press the two fire buttons (left and right sides) separately to make sure they both work (see Figure 6-3 on page 6-6 for pin locations).

Controller Pin Numbers

Top Fire Button	15 & 14
Bottom Fire Button	15 & 13
Start	4 & 7
Pause	4 & 6
Reset	4 & 5
1	7 & 3
2	7 & 2
3	7 & 1
4	6 & 3
5	6 & 2
6	6 & 1
7	5 & 3
8	5 & 2
9	5 & 1
*	8 & 3
0	8 & 2
#	8 & 1

Failures can be repaired using pages 6-6 through 6-10.

Changed by
ECN #0036
6/21/83

FAILURES

If one key pad key fails, check the 12 key switch set for contamination and clean if necessary. If there is no contamination, replace the Flex Circuit Pad.

If more than one key pad key fails or if the joystick or the fire buttons are not functioning properly:

1) Determine if the controller cable is defective (See Table 6-1).

2) If the controller cable is not defective:

a) Replace the flex circuit pad; or,
b) Align or replace the pots. (See Page 6-8).

NOTE: Pots must be aligned if replaced.

To use Table 6-1 to check the controller cables:

For each failed key, check the continuity from the cable connection pin (column 1) to the flex circuit pad pin (column 2). Note that each key is listed in two places under Failed Key.

Cable Connector Pins are numbered as shown in Figure 6-3.

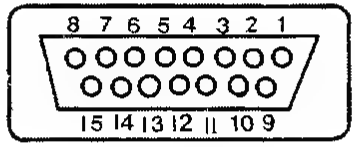

Figure 6-3. Cable Connector Pins

Flex circuit pad pins are numbered 11 (left) to 1 (right) as viewed with controller in normal position for game play.

Table 6-1. Game Controller Continuity Check

Failed Key	Column 1 Cable Connector	Column 2 Flex Circuit Pad
1(S1), 4(S4), 7(S7), *(S10)	1) Pin 3	2) Pin 8
2(S2), 5(S5), 8(S8), 0 (S11)	1) Pin 2	2) Pin 7
3(S3), 6(S6), 9(S9), # (S12)	1) Pin 1	2) Pin 6
1(S1), 2(S2), 3(S3), Start (S13)	1) Pin 7	2) Pin 9
4(S4), 5(S5), 6(S6), Pause (S14)	1) Pin 6	2) Pin 5
7(S7), 8(S8), 9(S9), Reset (S15)	1) Pin 5	2) Pin 4
* (S10), 0(S11), # (S12)	1) Pin 8	2) Pin 3
Start (S13), Pause (S14), Reset (S15)	1) Pin 4	2) Pin 10
Softfire (Top Fire Button)(S16, S17) not presently used in games	1) Pin 15 1) Pin 14	2) Pin 1 and 2) Pin 11
Trigger (Line) (Bottom Fire Button) (S18,S19)	1) Pin 13 1) Pin 14	2) Pin 2 and 2) Pin 11
Horizontal control on joystick does not work (Pot 2)	1) 10 & 9	
Vertical control on joystick does not work (Pot 1)	1) 11 & 9	

Changed by
ECN #0036
6/21/83

POT ARM ALIGNMENT PROCEDURE

If you have not already done so, determine if the controller cable is defective (see Table 6-1). If the cable is not defective, continue with the following steps.

Use Figure 6-4 as reference for steps 1 through 3.

1) Disassemble the controller and remove arm from wiper shaft on pot.

2) Adjust wiper shaft on pot so that reading between terminals #2 and #3 is 5K -20K Ohms.

3) Position arm on wiper shaft as shown below; position A.

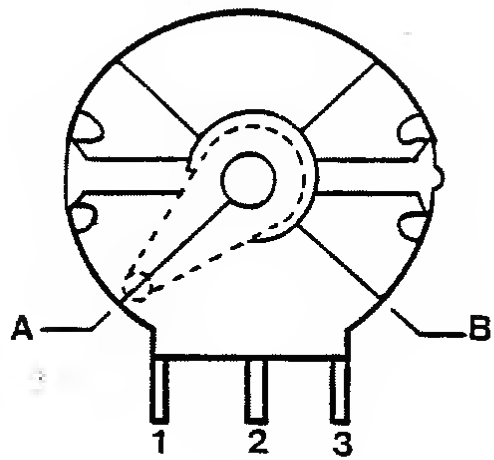

Figure 6-4. Pot and Arm Assembly

4) Reassemble the controller (refer to Page 6-10, CONTROLLER DISASSEMBLY/ASSEMBLY.

5) Move the controller joystick to position 1 (refer to Figure 6-2). Use an Ohm meter to determine the pot readings through the cable (cable connector Pins 11 & 9 and 10 & 9). The pot reading should be no greater than 50K Ohms.

6) Move the controller joystick to position 2 (refer to Figure 6-2). The pot reading through the cable (connector Pins 10 & 9 and 11 & 9) should be at least 430K Ohms greater than in position 1.

7) If this test fails:

a) Replace the pots if they have not already been replaced.

b) Replace the actuator plates if the pots have already been replaced.

NOTE: The actuator plates must be replaced as a complete unit which includes the two actuator plates and the slide block (see Figure 6-5).

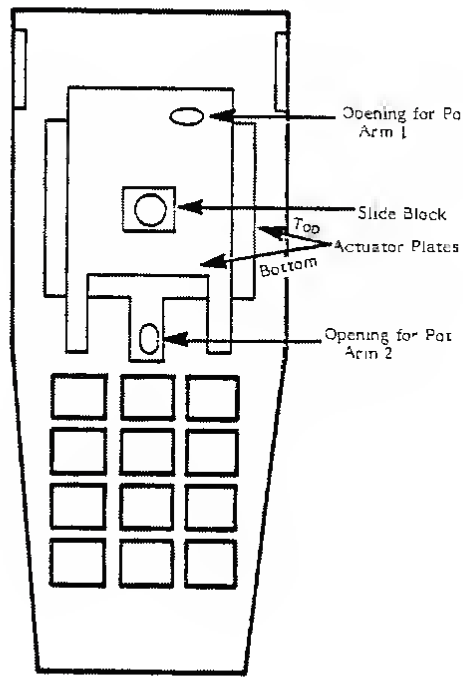

Figure 6-5. Controller Top (Underside)

Changed by ECN #0036 6/21/83

Disassembly

1. To remove the select switches:

   - Slide a flathead screw driver under the select switch bezel between switches and pry out the bezel (See Figure 6-6).
   - Remove the switches.

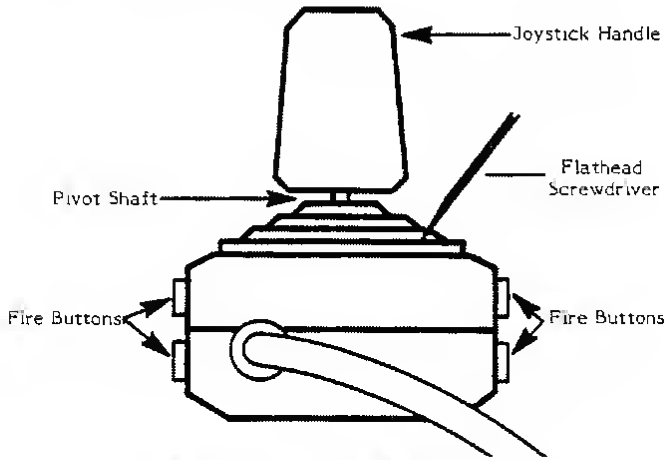

Figure 6-6. Select Switch Bezel Removal

2. Remove the three screws from the bottom controller case.

3. Separate the top controller case from the bottom controller case. The flex circuit and key pad can now be removed.

4. Remove the two fire buttons on each side by pulling them up.

At this point you can check or replace the Flex Circuit Pad and pots, if necessary.

5. Use the 5200 Controller Knob Puller Tool (FC100214) to remove the joystick handle.

   Push the knob shaft into one of the corners of the top housing opening. Push down the boot with the tool to expose the shaft. Push the tool toward the shaft until the shaft is inside the notch of the tool's head (See Figure 1). Now, gently lever the tool, and the knob will pop off.

   NOTE: By using care, you will not damage the boot during this process.
   Be sure to note position of actuator plates and slide block for replacement.

Figure 6-7. Controller Knob Removal

Assembly

1. To replace joystick:

   - Place boot in position on outside of top controller case.
   - Position actuator plates and slide block in underside of top controller case.
   - From underside, place pivot shaft through holes in slide block and boot.
   - From top, push joystick onto pivot shaft.

2. Replace the fire buttons and place the key pad on the support plate (refer to Figure 6-1).

3. Position the pot arms as shown in Figure 6-8.

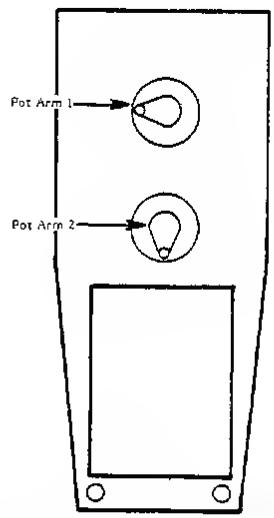

Figure 6-8. Pot Arm Positions for Assembly

Changed by
ECN #0036
6/21/83

4. Place the Select Switches' flex strip through the opening at the left of its well.

5. Position the top controller case on the bottom controller case. Be sure that:

   - The actuator plates are correctly positioned in the top controller case (refer to Figure 6-5).
   - The pot arms are set into the holes in the actuator plates (refer to Figure 6-5).
   - The joystick pivot shaft sets in the well located between the two pots.

6. Replace and tighten the three screws which hold the top and bottom controller case together.

7. Replace the select switches by placing them on top of the function key pad and pressing the bezel into position on top of them.

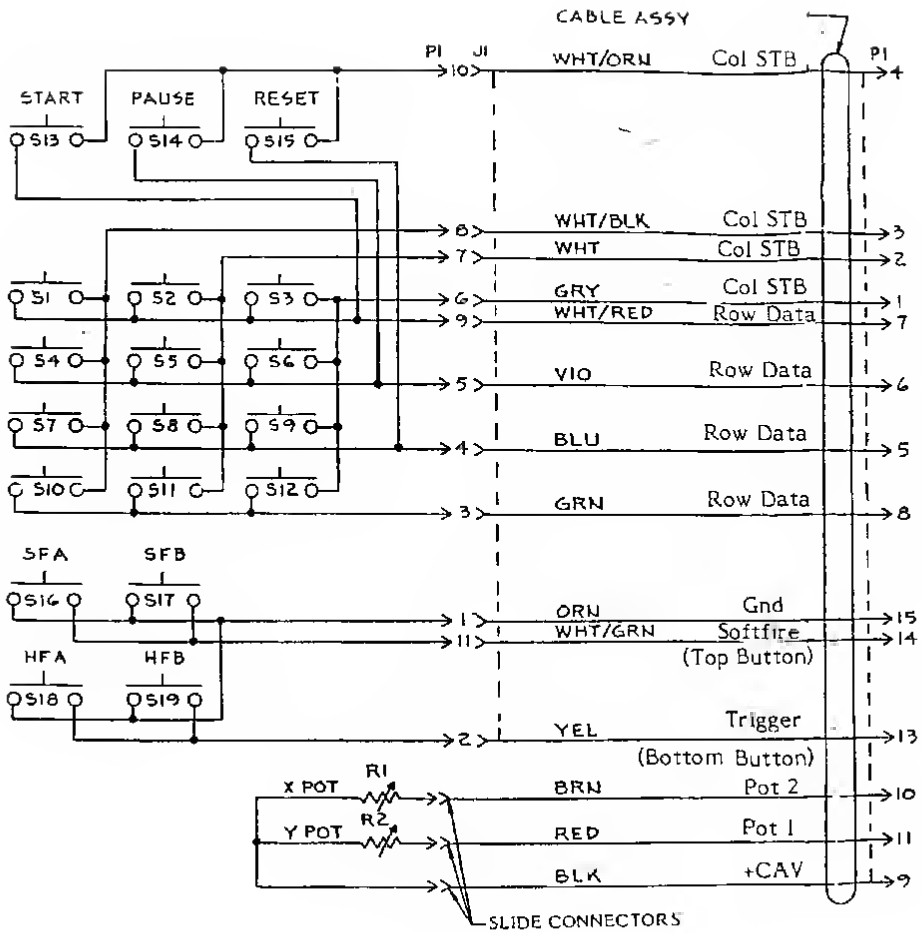

Figure 6-9. CX52 Game Controller Schematic

CONTROLLER TEST WITH NO MODEL 5200 CONSOLE

Special Equipment Needed:

- An Ohm meter

Procedure:

Use Figure 6-2 on Page 6-3 as reference for Steps 1 and 2.

1) Move the controller joystick to position 1. Use an Ohm meter to determine the pot readings through the cable (cable connector Pins 11 & 9 and 10 & 9). The pot reading should be no greater than 50K ohms.

2) Move the controller joystick to position 2. The pot reading through the cable should be at least 430K ohms greater than in position 1 (cable connector pins 10 & 9 and 11 & 9).

3) To check the switches you must connect the leads of the Ohm meter to the pin numbers given below. Without the button depressed it should show infinite resistance (open circuit). With the button depressed it should show less than 50K ohms resistance. Be sure to press the two fire buttons (left and right side) separately to make sure they both work (See figure 6-3 on Page 6-5 for pin locations).

	Controller Pin Numbers
Top Fire Button	15 & 14
Bottom Fire Button	15 & 13
Start	4 & 7
Pause	4 & 6
Reset	4 & 5
1	7 & 3
2	7 & 2
3	7 & 1
4	6 & 3
5	6 & 2
6	6 & 1
7	5 & 3
8	5 & 2
9	5 & 1
*	8 & 3
0	8 & 2
#	8 & 1

Failures can be repaired using pages 6-5 through 6-8.

This Page Intentionally Left Blank

SECTION 7

CX53 TRAKBALL

Section 7 provides the information necessary to troubleshoot and repair the CX53 Trakball which is used with the model 5200. The following pages contain descriptions, test procedures, diagnostic flowcharts, a symptom checklist, disassembly/assembly instructions and a parts list for the CX53 Trakball. The schematic and silkscreen are included separately.

This section is organized as follows:

Page	Information
7-1 through 7-4	An overview and general description of the CX53 Trakball.
7-5 and 7-6	Theory of Operation and Block Diagram
7-7 through 7-26	Test Procedures, Diagnostic Flowcharts and Symptom Checklist
7-27 through 7-30	Disassembly/Assembly Procedures
7-31 and 7-32	The CX53 Parts List

The Trakball Schematic and Silkscreen accompany this manual.

OVERVIEW

The CX53 Trakball is an analog controller which can be substituted for the joystick on several game cartridges.

It is composed of an outer case which houses the keypad PC board, the main PC board, the roller shaft assemblies, an idler shaft assembly and a cue ball. Use Figure 7-1 and 7-2 as reference for the following discussion of Trakball parts.

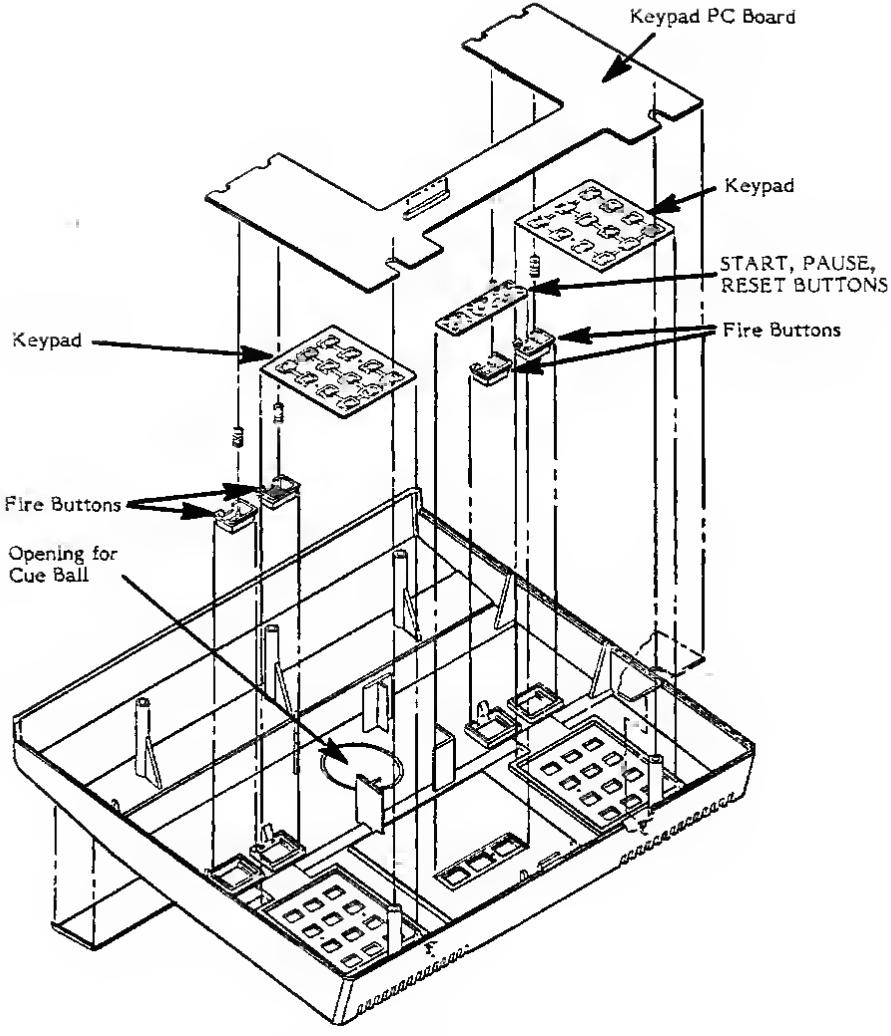

Figure 7-1. Top Cover Assembly

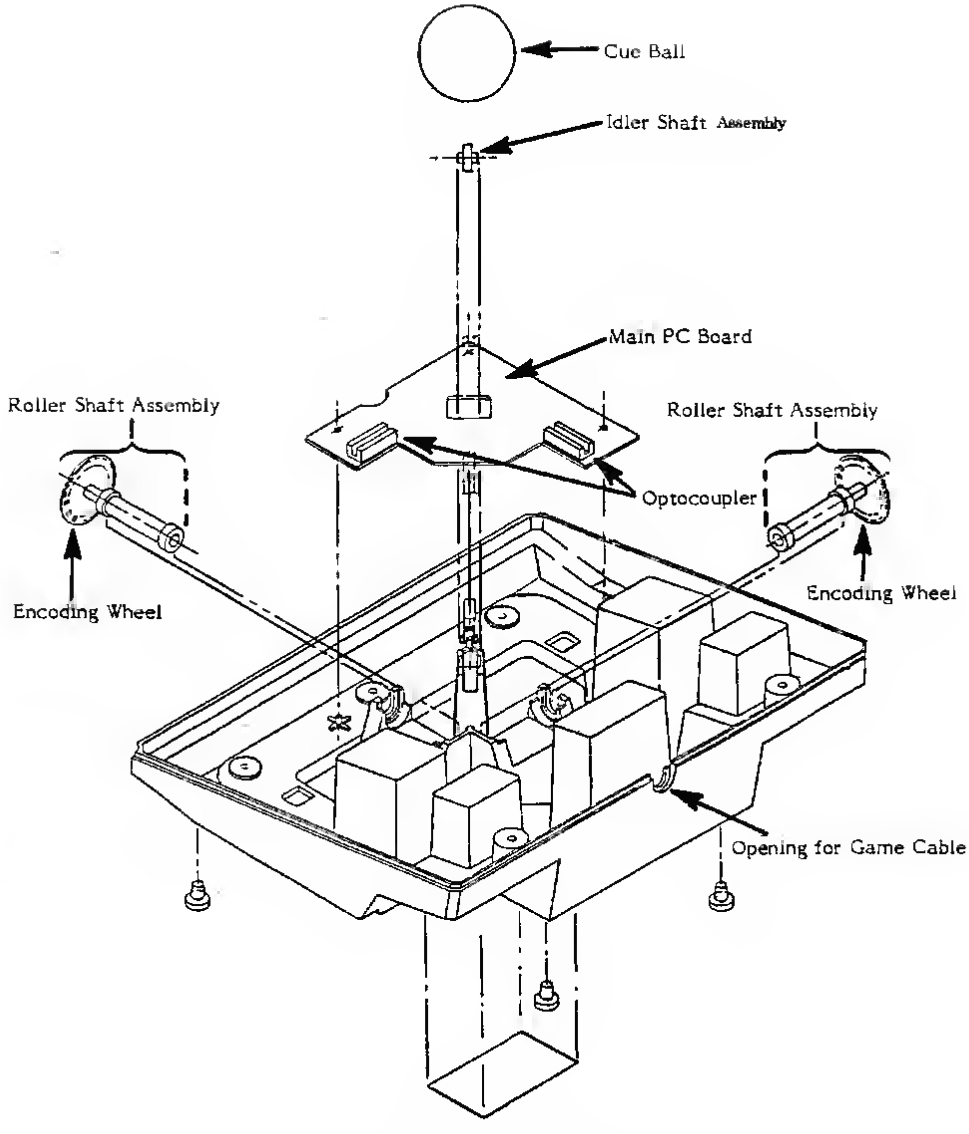

Figure 7-2. Bottom Cover Assembly

Outer Case

The outer case consists of a top and a bottom plastic cover which are held together by 5 phillips head screws.

At the base of the bottom cover is a cable wrap post for cord storage.

Top Cover

The top cover provides the following (visible from the outside):

- an opening in the center for the cue ball.
- the START, PAUSE and RESET buttons. Their functions are:

  START - is used to start the game being played.

  PAUSE - temporarily stops the game during play.

  RESET - permanently stops game play until the Start button is pressed.

- Two conductive rubber keypads; one on each side of the console. The two keypads are identical - one is for left handed players; the other is for right handed players. The use is the same as the keypad on the regular Model 5200 controller.
- Two identical sets of fire buttons (for use by right handed or left handed players). The two buttons closest to the cue ball are the same as the bottom fire buttons on the regular Model 5200 controller. The two buttons closest to the outside of the console are the same as the top fire buttons on the regular Model 5200 controller.

  The underside of the top cover houses the keypad PC board. All of the buttons make contact against this board. The fire buttons are dome type. The remaining buttons (the START, PAUSE, RESET and the keypad buttons) are all the conductive rubber type.

Bottom Cover

The bottom cover provides:

- an opening at the rear for the game cable
- the main PC Board
- two roller shaft assemblies each consisting of:
  - a roller shaft
  - 2 bearings
  - a slotted encoding wheel
- an idler shaft assembly
- a cue ball

THEORY OF OPERATION

For the following discussion, reference the lower PC board assembly schematic. Since both X and Y circuit operation is identical, refer to the X circuit for this description.

The CX53 Trakball is a 2-channel D to A converter which translates optically coupled clocks into analog currents. The current sources or sinks into the two paddle line inputs used for X-Y control in the 5200. Figure 7-3 is a function block diagram to illustrate the following information.

When the cue ball is spun, the two roller shafts rotate. Each shaft has a slotted encoding wheel at one end which interrupts the two light sources in the optocoupler for that channel. This produces a pair of alternating voltage wave forms from the photo-transistors in the optocoupler (U2).

Comparator A1 straightens the signals from U1 into 5V square waves and feeds them to A2 and A5. These two clock waveforms are approximately 90° out of phase. This allows correct direction sensing, depending upon which clock leads the other. A2 senses which leading edge of the two clocks is coming first, thus determining direction. A5 combines the two clocks into one with doubled frequency, thus increasing resolution. This clock is in turn fed into A3 which sets the clock's pulse width at a constant duration while still allowing the frequency to vary with speed.

The Q and $\bar{Q}$ outputs from A2 are used to gate the fixed-width pulses from A3 with the directional clockgates (A4). This produces alternating outputs depending upon direction (Left or Right). The current integrator networks on the outputs of A4A &C and A5B&C then link these gated clocks to the analog input of the 5200 main console.

TP9 & TP10 each should have a ramp waveform approximately 3 volts in amplitude. This ramp waveform is generated in the main circuitry of the 5200 and is controlled by increases or decreases in current caused by the Trakball circuit. When the ball is stationary, the ramp will remain at approximately 3V. When the ball is spun in the "right" or "down" direction an inverted clock siphons current off the corresponding ramp with a net reduction in the slope of the ramp (-600mV max. @ C7 and C8). When the ball is spun in the "left" or "up" direction a positive clock causes positive current integration, with a net increase in the slope of the ramp (+900mV max. @C7 and C8).

The clear line (used for calibration) is held HIGH for normal operation. During initialization the console pulls it LOW. This prevents any ball-generated clocks coming from A3, and allows the static output level to be read and used as a reference reading in determining velocity change.

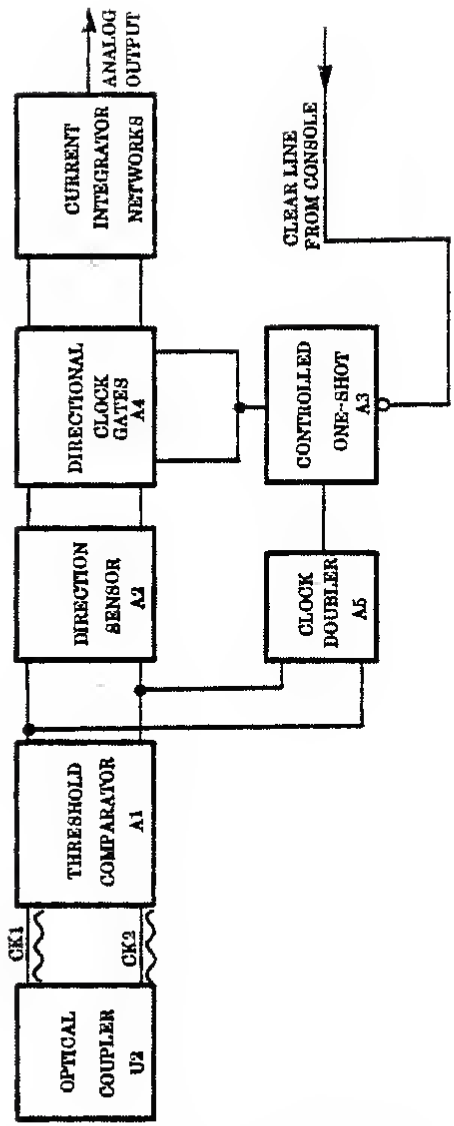

Figure 7-3. Trakball Block Diagram.

TEST PROCEDURES

Equipment Needed:

- a known good Model 5200 console
- a T.V. set, properly adjusted
- a Missile Command™ Cartridge
- a 1.1 Diagnostic Cartridge
- a Digital Voltmeter

Mechanical Check:

Verify that the ball will spin freely and smoothly in all directions. There should be no excessive noise or vibration. If the ball will not spin freely or is excessively noisy, refer to Flowchart A, page 7-11 of this section.

Keyboard Test:

1) Plug the Trakball into player port #1 of the Model 5200 console.

2) Insert a 1.1 Diagnostic Cartridge into the Model 5200.

3) Turn the Model 5200 on and select the POKEY Adjust TEST (Test #5).

   If the POKEY Adjust Test cannot be selected using the trakball (due to keyboard failure), use a Model 5200 controller to select the test. When the test has been selected, unplug the Model 5200 controller and plug in the Trakball to continue testing.

4) Test all functions of the START, PAUSE, and RESET buttons and the Keypads:

Table 1-1 shows the correct display for each of the buttons.

Table 7-1
Keyboard Test Display

Button/Keys	Display
1	1
2	2
3	3
4	4
5	5
6	6
7	7
8	8
9	9
0	0
*	A
#	B
START	C
PAUSE	D
RESET	E

If the START, PAUSE or RESET buttons fail, go to Flowchart B, page 7-12 of this section.

If the Keypad(s) fail(s), go to Flowchart BX, page 7-13 of this section.

Trakball and Firebutton Test:

1) Insert the Missile Command cartridge into the Model 5200.

2) Turn the Model 5200 on and press START.

3) By spinning the ball at a moderately slow speed, verify that it will cause the cursor (crosshairs) to move in any direction. Be sure that it moves to all extremes of the screen (up, down, left, right, diagonal, and circular motions).

   NOTE: When moving in diagonal or circular motions, the cursor will move in slight "steps". This is due to the type of programming used and should not be considered a trakball failure (see Figure 7-4).

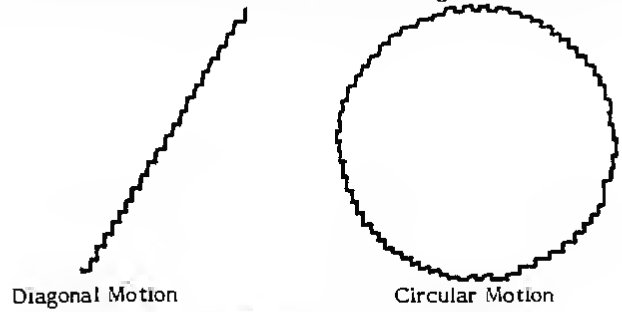

Figure 7-4. Diagonal or Circular Motion.

   NOTE: If more time is required than the attack wave allows, simply press START as needed.

   For Cursor left/right failures, go to Flowchart C, page 7-14 of this section.

   For Cursor up/down failures, go to Flowchart D, page 7-19 of this section.

4) Move the cursor to the right border of the screen. Spin the ball as fast as possible by hand in the right direction. This tests for "directional dropouts". While spinning the ball as fast as possible to the right, the cursor should remain on the right border. There should be no movement to the left.

   Repeat this test for the left, up, and down directions. For Left/Right failures, go to Flowchart E, page 7-23. For up/down failures, go to Flowchart F, page 7-24.

5) Verify that a missile fires each time either of the fire buttons (Trigger) closest to the cue ball is pressed. Be sure to test both left and right fire buttons.

If a failure occurs, go to Flowchart M, page 7-25 of this section.

6) Disconnect the trakball from the Model 5200 console. Insert one probe of a Digital Voltmeter into pin 14 of the trakball player port plug. Insert the other probe into pin 15. When either of the outside (Softfire) firebuttons is pressed, the Digital Voltmeter should read less than 200 ohms. Perform this test for both of the outside firebuttons. If a failure occurs, go to Flowchart M, page 7-25 of this section.

DIAGNOSTIC FLOWCHARTS

The Diagnostic Flowchart is intended to be easy to use and the primary aid when troubleshooting the Model 5200. Follow the prompts in the order presented. When a question is asked, follow the line from the box that best applies to your unit's condition. When that line terminates with a letter inside a circle, locate the letter on a different page and continue the diagnosis. The flowchart leaves nothing to chance, it tells you when to perform a specific test and when to replace components.

SWAP OUT PROCEDURE

At many places in the diagnostic flowchart, a box tells you to "swap out" a component, a chip, or a number of chips in a particular order. The "swap-out" instruction means that you should replace the indicated components (one at a time) with a known-good component of the same type. The unit should then be tested with the new, known-good component in place to see whether the swap out solved the problem being checked. If the swap out did not fix the problem, leave in the new chip and swapout the next. Repeat this procedure for the rest of the swapout. Once the unit properly functions, reinstall the removed IC's to determine which are actually defective.

NOTE: If sockets or components are replaced, trim leads as close to PC Board as possible (See Silkscreen - shaded areas indicate which leads to trim. Only trim leads in shaded areas as close to board as possible).

REPLACE IN ORDER

The "replace in order" instruction means that you should replace the components indicated in the order listed until the result called out in the previous block is obtained.

X - Some lines terminates with an X inside a circle. When this occurs, return to the beginning of the test sequence (Mechanical Check page 7-7).

If you have questions or require further information, call your Atari TechLine Specialist.

Inside California
(800) 672-1466

Outside California
(800) 538-1535

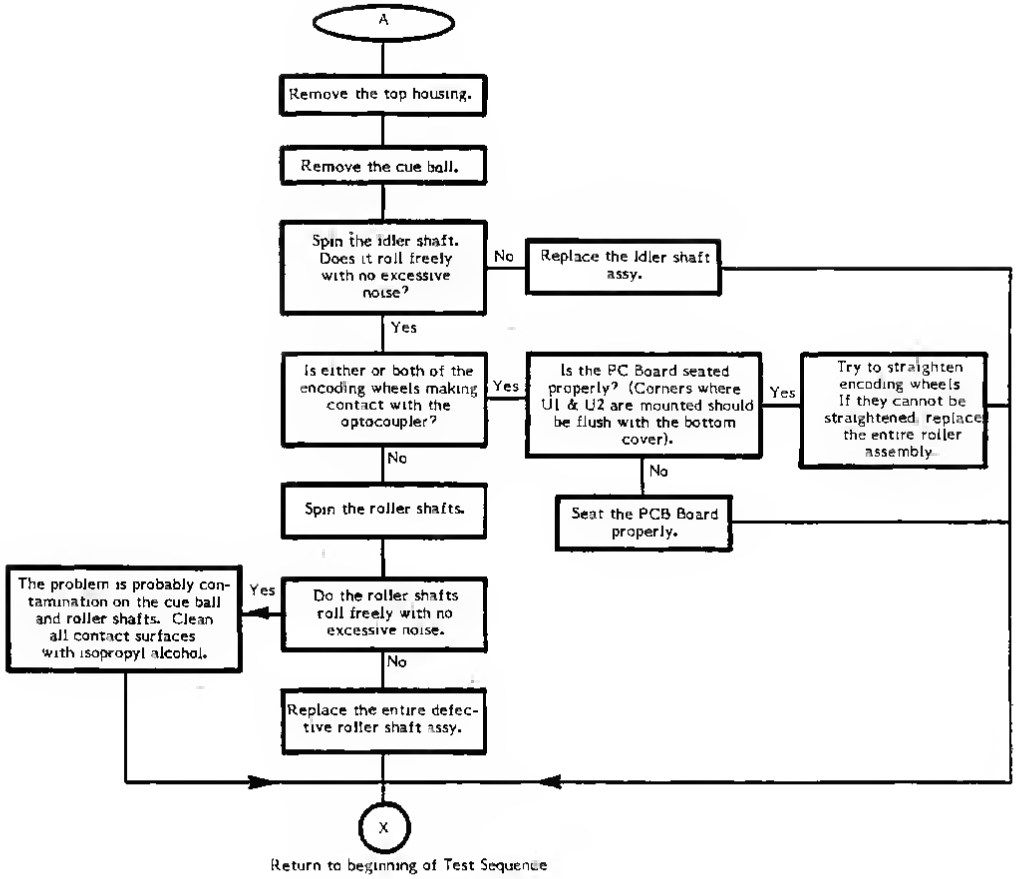

Return to beginning of Test Sequence

KEYBOARD TROUBLESHOOTING (START, PAUSE, RESET BUTTONS)

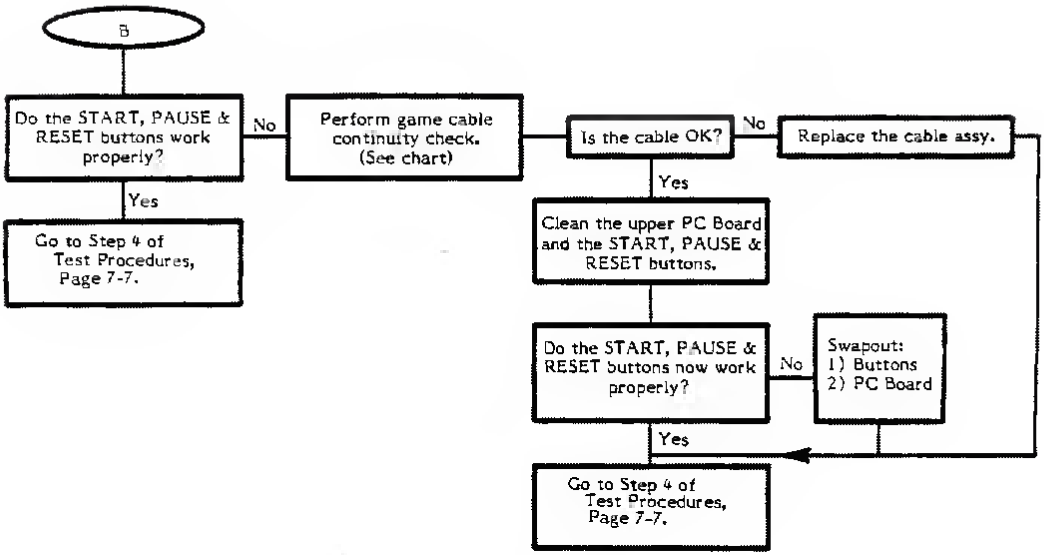

Game Cable Continuity Check

Using a Digital Voltmeter, check the continuity from J1 (column 1) on the upper PC Board to the game cable port connector (column 2).

	(1)	(2)
Key	J1 Pin #	Game Cable Port Connector Pin #
START, PAUSE, RESET	11	4
START, 1,2,3	4	7
PAUSE, 4,5,6	2	6
RESET, 7,8,9	1	5
1,4,7,*	5	3
2,5,8,0	7	2
3,6,9,#	3	1

KEYBOARD TROUBLESHOOTING (KEYPADS)

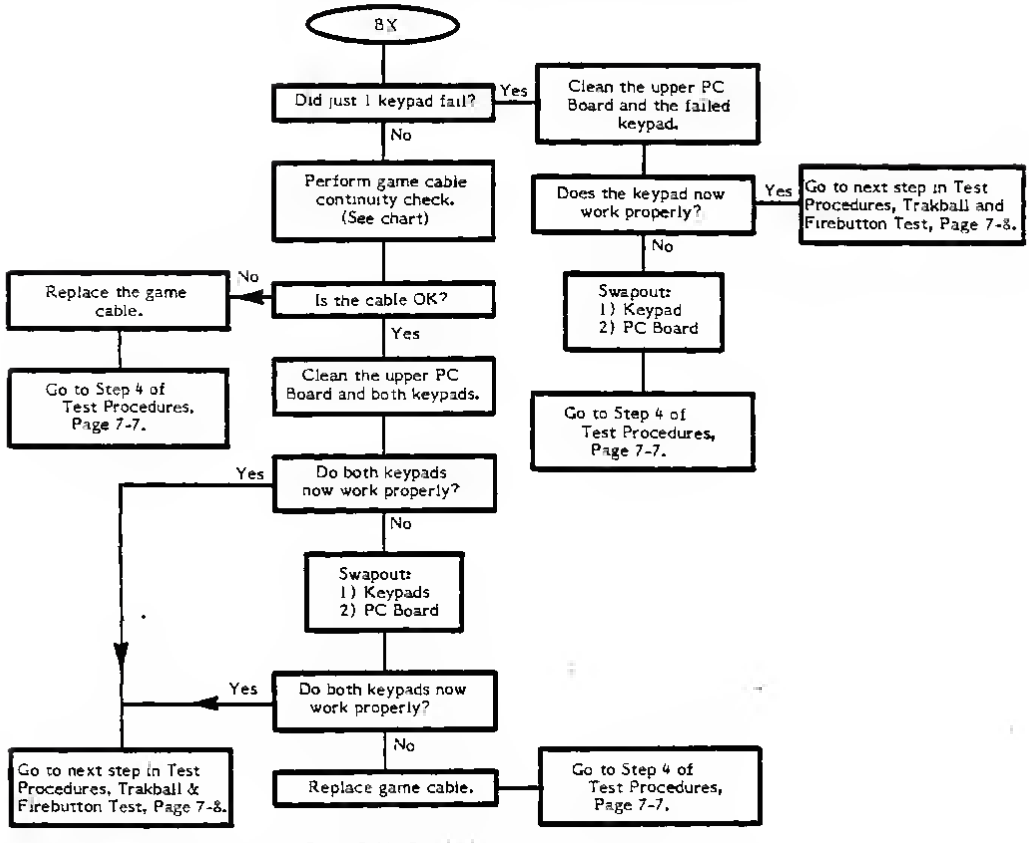

Game Cable Continuity Check

Using a Digital Voltmeter, check the continuity from J1 (column 1) on the upper PC Board to the game cable port connector (column 2).

	(1)	(2)
Key	J1 Pin #	Game Cable Port Connector Pin #
START, PAUSE, RESET	11	4
START, 1,2,3	4	7
PAUSE, 4,5,6	2	6
RESET, 7,8,9	1	5
1,4,7,*	5	3
2,5,8,0	7	2
3,6,9,#	3	1

CURSOR LEFT/RIGHT TROUBLESHOOTING

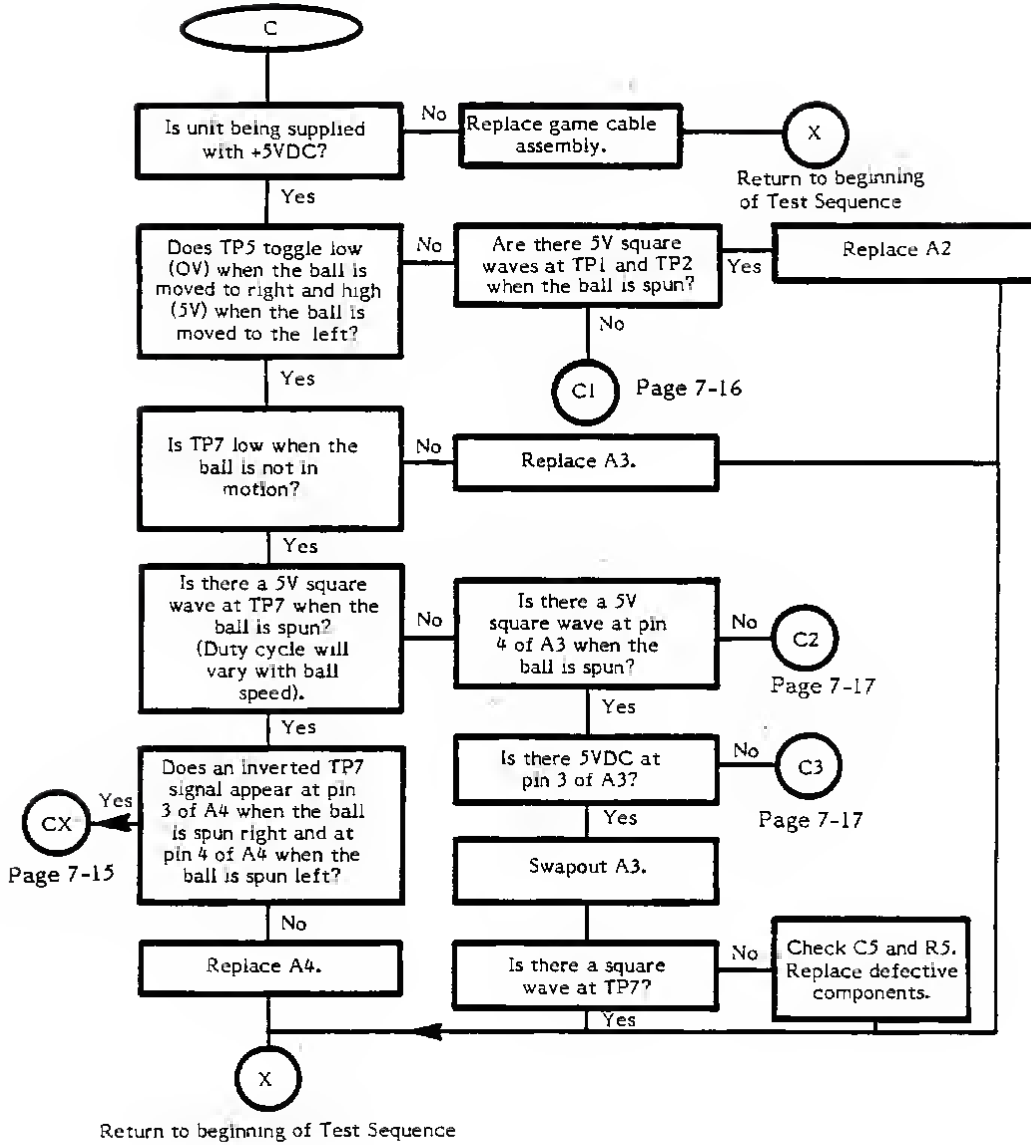

CURSOR LEFT/RIGHT TROUBLESHOOTING (Cont.)

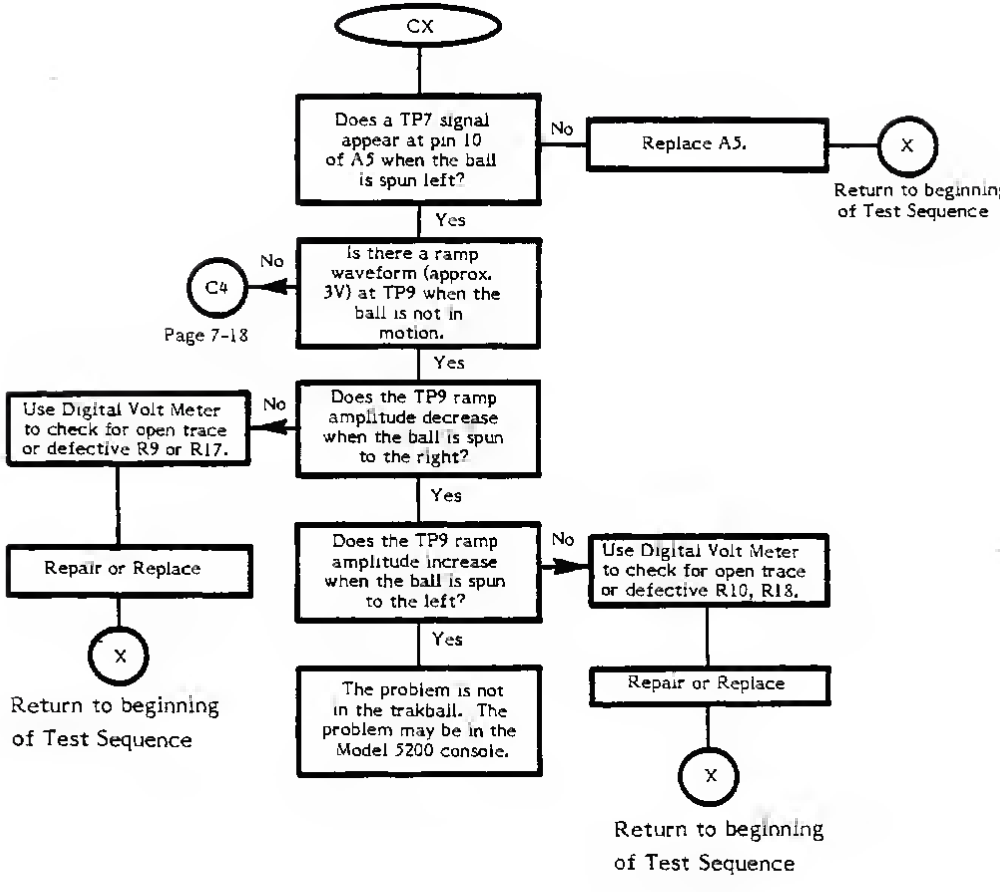

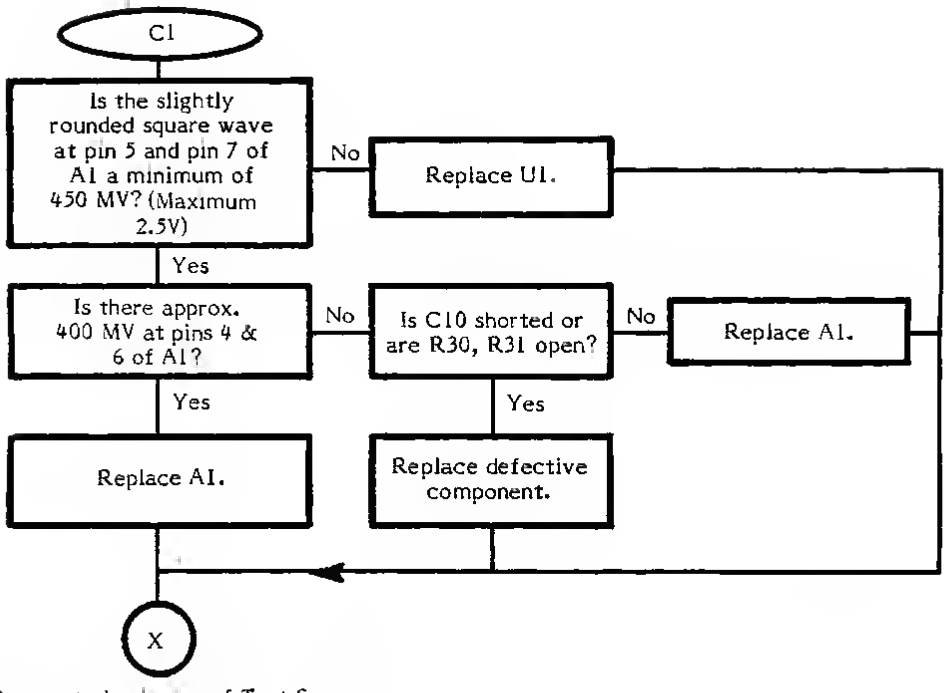

Return to beginning of Test Sequence

CURSOR LEFT/RIGHT TROUBLESHOOTING (Cont.)

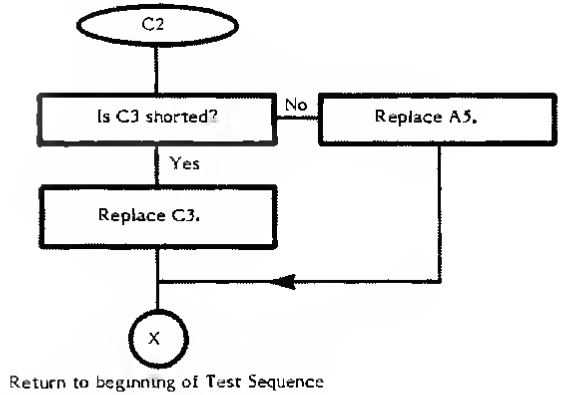

Return to beginning of Test Sequence

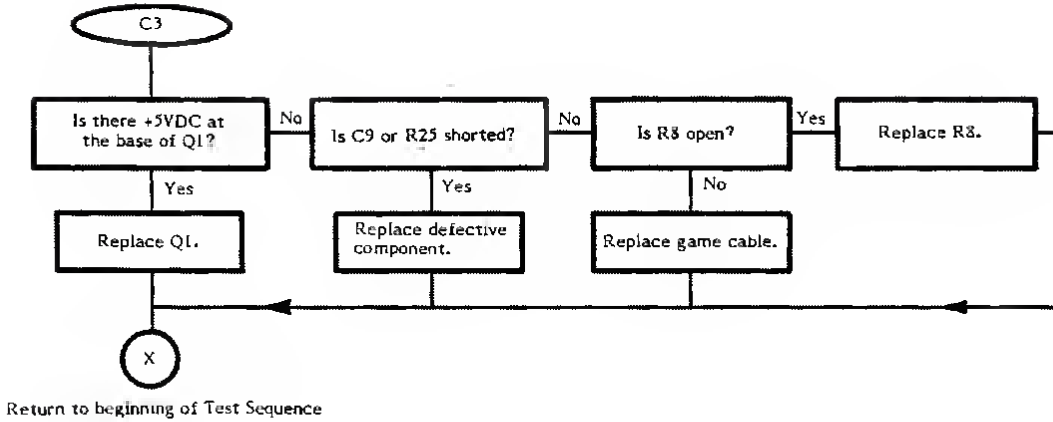

Return to beginning of Test Sequence

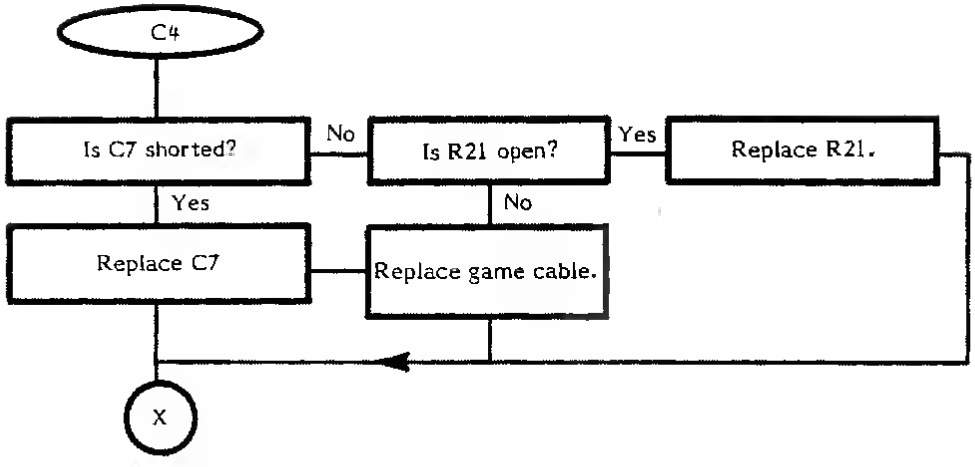

Return to beginning of Test Sequence

CURSOR UP/DOWN TROUBLESHOOTING

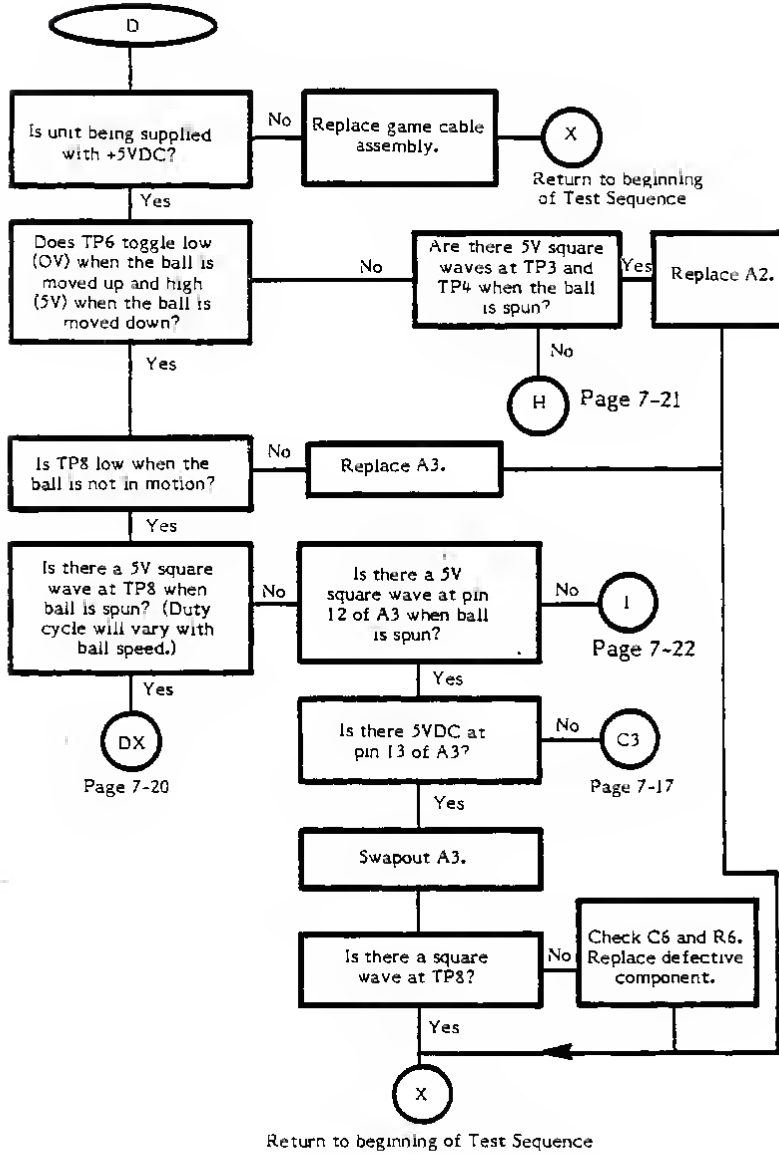

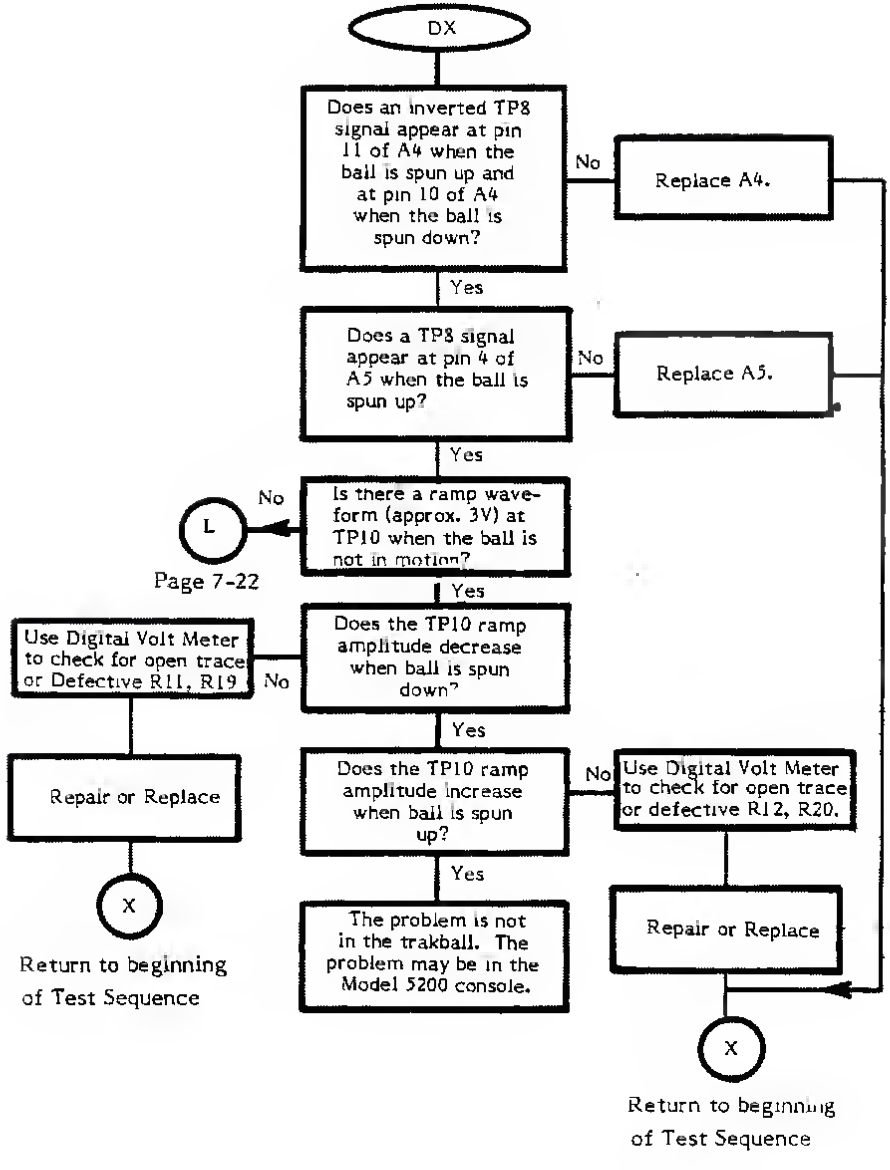
DX
Does an inverted TP8 signal appear at pin 11 of A4 when the ball is spun up and at pin 10 of A4 when the ball is spun down?
No
Replace A4.
Yes
Does a TP8 signal appear at pin 4 of A5 when the ball is spun up?
No
Replace A5.
Yes
Is there a ramp waveform (approx. 3V) at TP10 when the ball is not in motion?
No
L
Page 7-22
Yes
Does the TP10 ramp amplitude decrease when ball is spun down?
No
Use Digital Volt Meter to check for open trace or Defective R11, R19
Repair or Replace
X
Return to beginning of Test Sequence
Yes
Does the TP10 ramp amplitude increase when ball is spun up?
No
Use Digital Volt Meter to check for open trace or defective R12, R20.
Repair or Replace
X
Return to beginning of Test Sequence
Yes
The problem is not in the trakball. The problem may be in the Model 5200 console.

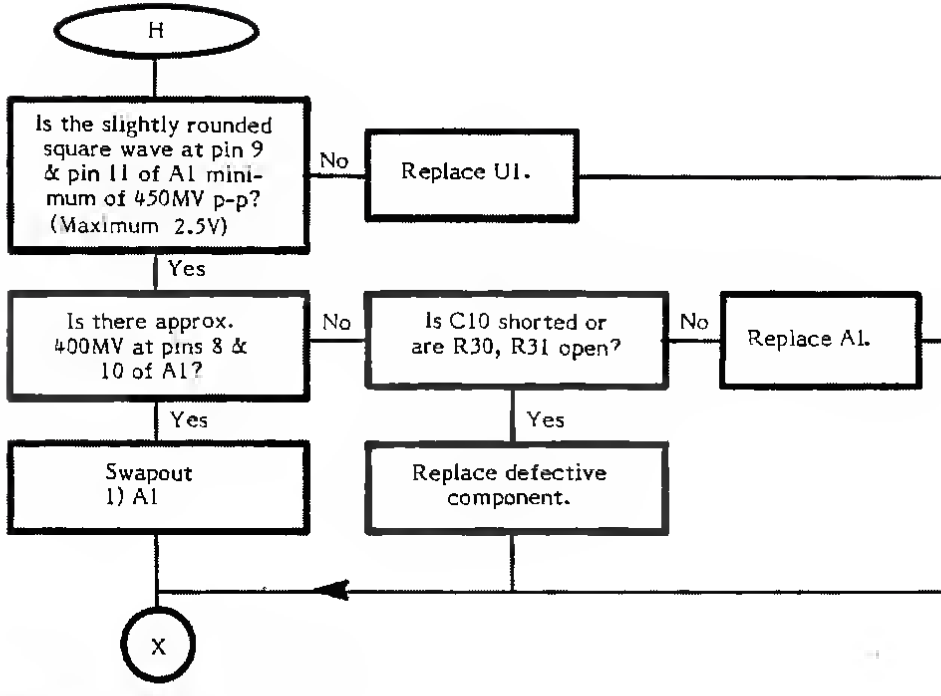

Return to beginning of Test Sequence

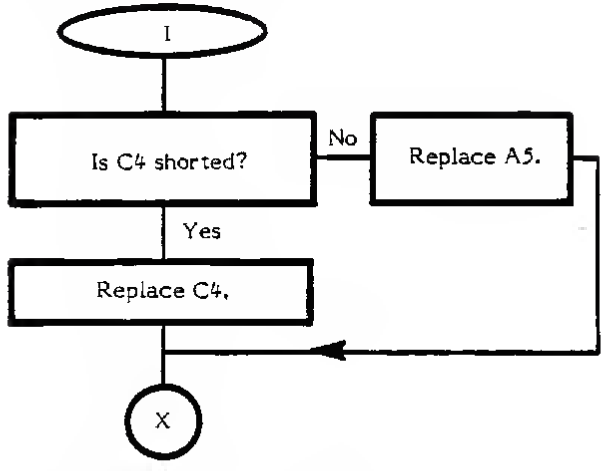

Return to beginning of Test Sequence

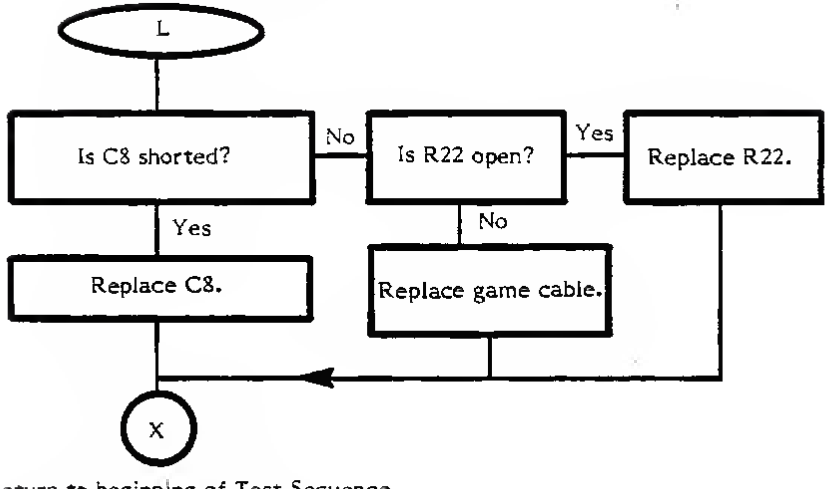

Return to beginning of Test Sequence

LEFT/RIGHT DIRECTIONAL DROPOUTS TROUBLESHOOTING

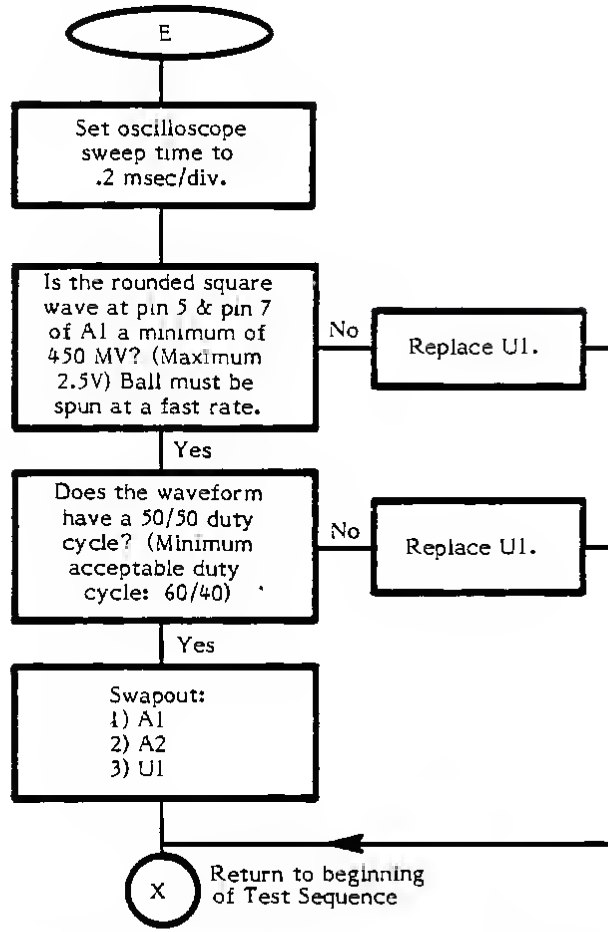

NOTE: Make sure the main PC Board is seated properly in the bottom cover. The corners where U1 and U2 are mounted should be flush with the bottom cover.

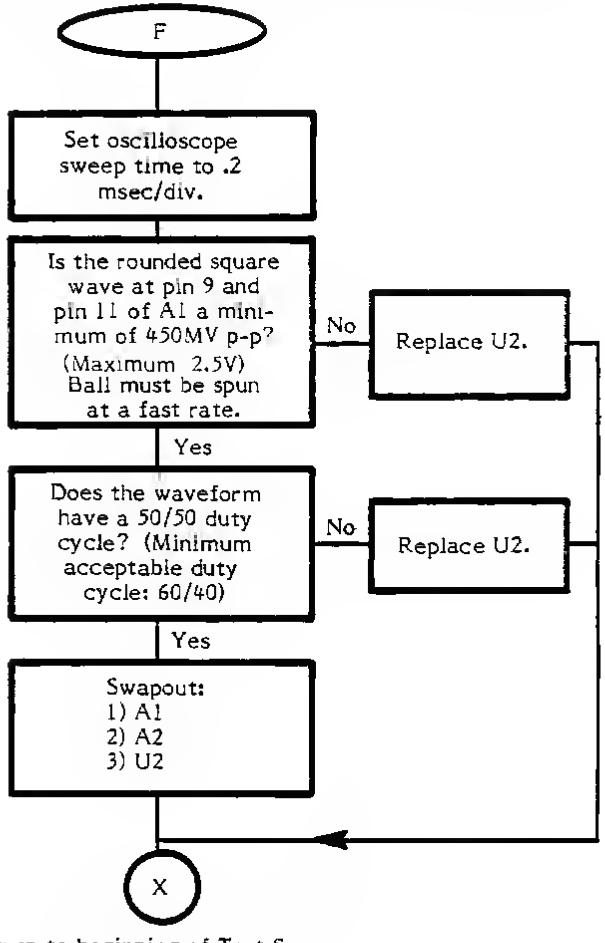

Return to beginning of Test Sequence

FIREBUTTON TROUBLESHOOTING

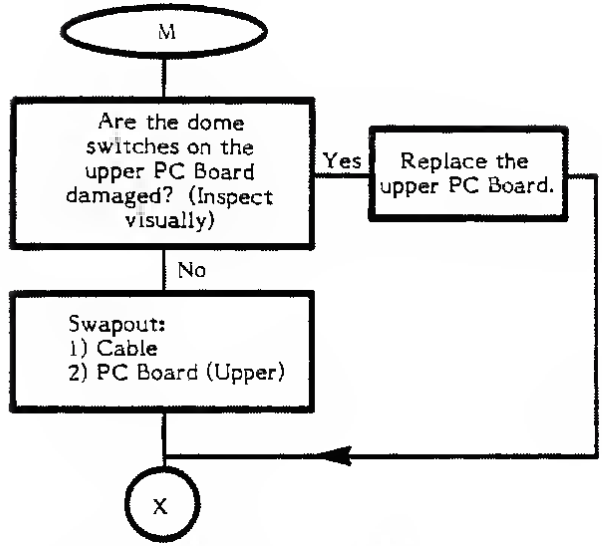

Return to beginning of Test Sequence

SYMPTOM CHECKLIST

SYMPTOM	POSSIBLE CAUSES	FLOWCHART ENTRY POINT
Noisy operation or ball won't spin freely	Dirty roller and idler shafts and ball, worn bearings, warped encoding wheels	A, Page 7-11
Keyboard failure	Dirty keyboard PC board, dirty 12-key switch set, or defective game cable	B, Page 7-12
Fire button failure	Damaged dome switches on keyboard PC Board, defective game cable	See Chart, Flowchart B, Page 7-12
Cursor won't move at all	Q1, A3, defective game cable	No Flowchart Entry Point
Cursor moves erratically left and right or up and down	A3	No Flowchart Entry Point
Cursor won't move left or right	U1, A1-A5, C7	C, Page 7-14
Cursor won't move up or down	U2, A1-A5, C8	D, Page 7-19
Directional dropouts (left or right)	U1, PC board not seated properly	E, Page 7-23
Directional dropouts (up or down)	U2, PC board not seated properly	E, Page 7-23
Blank screen when trakball is plugged in	C1,C2 or any of the IC's A1-A5 shorted to ground	No Flowchart Entry Point

Be sure that unit is unplugged from the Model 5200 Console before disassembling to any level.

Refer to Figures 7-1 and 7-2, for the following Disassembly/Assembly.

- Turn the unit upside down and support it so that cue ball doesn't rub against the work bench (See Figure 7-5).

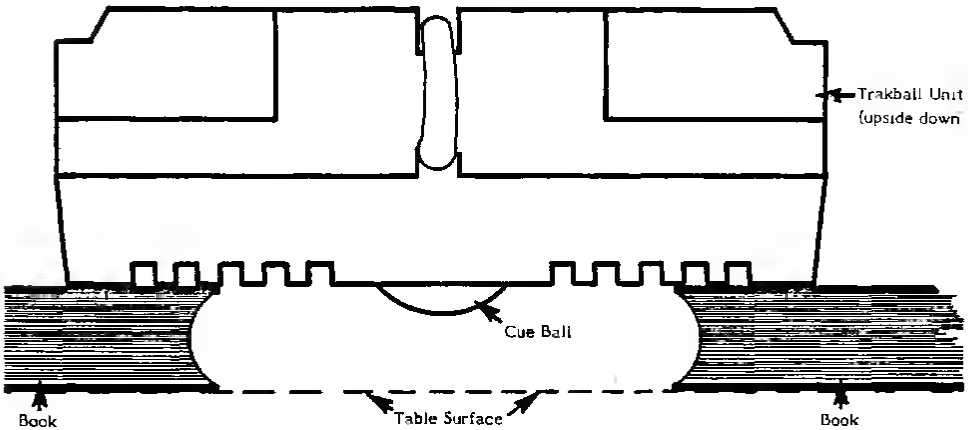

Figure 7-5. Cue Ball Support

- Remove the 5 phillips head screws from the bottom cover.
- Turn the unit right side up. Lift off the top cover and place it upside down.
- To remove the Keypad PC board (See Figure 7-6):
  - Unplug the 11-pin ribbon cable from the PC board. Be sure to note polarity when unplugging.
  - Carefully pull out on the four retaining clips (top cover) while lifting up on the board.

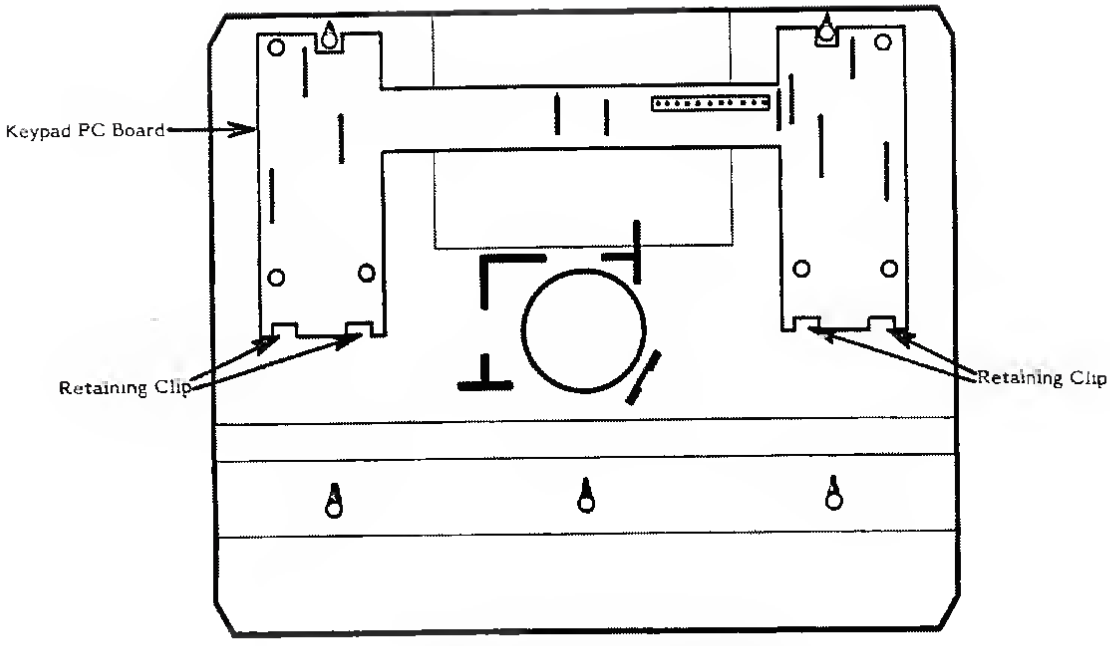

Figure 7-6. Top Cover (Underside)

To replace the Keypad PC Board:

- Position the board as shown in Figure 7-6. Be sure that PC board is under the notches at the back of the top cover.
- Carefully pull the retaining clips (top cover) far enough away from the PC board to allow the board to slip down and lock into position under the clip.
- Plug in the 11-pin ribbon cable.

To remove the main PC Board: (See Figure 7-7)

- Unplug the 5-pin cable plug (J2). Be sure to note polarity when unplugging.
- Lift and remove the cue ball and the two roller shafts.
- Carefully pull out on retaining clip A and lift the PC board, then pull out on retaining clip B and lift the PC board.
- Remove the PC board.

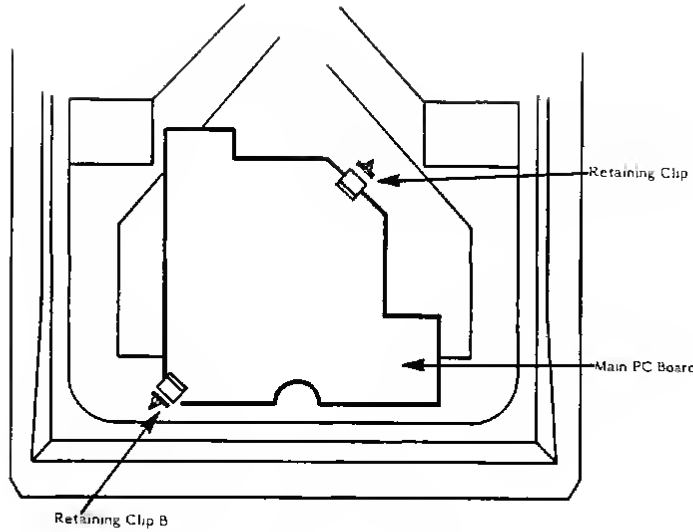

Figure 7-7. Main PC Board

To replace the main PC Board:

- Position the board as shown in Figure 7-7. Be sure that the holes in the board are aligned with the three holding tabs in the bottom cover.
- Carefully pull out on retaining clip A, slip the board down and lock it into place under the clip.
- Carefully pull out on retaining clip B, slip the board down and lock it into place under the clip.
- Plug in the 5-pin cable plug (J2) on the PC board.

To reassemble the console:

- Replace the main PC board in the bottom cover.
- Replace the cue ball and two roller shafts in the bottom cover. Be sure that the roller shaft bearings and the encoding wheel are seated properly. The bearings fit into the rounded wells at each end of the roller shaft assembly. The encoding wheel fits into the optocoupler slot.
- Replace the keypad PC board in the top cover.
- Be sure that all cables are plugged in correctly.
- Be sure that all springs and keypads are correctly mounted in the top case.

- Place the top cover over the bottom cover.
- Turn the unit upside down. Support the unit on books to keep the cue ball from rubbing against the work bench.
- Replace and tighten the five phillips head screws in the bottom cover.

LOCATOR	DESCRIPTION	PART NUMBER
	TRAKBALL ASSY	**CA020194**
	Top Housing Assy	**CA020197**
	Bottom Housing Assy	**CA020198**
	Lower PCB Assy	**CA020140**
	Roller Shaft Assy	**CA020583**
	Cable Assy	**CA020338**
	Top Housing Assy	**CA020197**
	Top Housing	C020195
	Name Plate	C020193
	12-Key Switch Set	C018126
	Fire Button	C020192
	Auxiliary Function Keys	C018128
	Upper PCB Assy	CA020287
	Spring	C012951
	Bottom Housing Assy	**CA020198**
	Bottom Housing	C021096
	Roller Shaft Assy	CA020583
	Idler Shaft Assy	CA020582
	Ball, 2 1/4" Diameter	C020191
	Feet, rubber	88-1006
	Lower PCB Sub-Assy	CA020141
	Shaft, Roller	C020572
	Encoding Wheel	C020571
	Bearing	C020190
C1	Cap, Electrolytic Radial 10uf 16V	C014392
C2	Cap, Ceramic Axial .1uf 50V	C014180-19
C3,4	Cap, Ceramic Axial 470pf 50V	C014180-07
C5,6,7,8	Cap, Mylar Radial: .1uf, 100V	C017885
C9	Cap, Ceramic Axial: .01uf 50V	C014180-18
C10	Cap, Ceramic Axial: .22uf 50V	C014181-05
R1-4	Resistor: 3K 1/4W	14-5302
R5,6	Resistor: 12K, 1/4W	14-5123
R7,26-29	Resistor: 10K 1/4W	14-5471
R8	Resistor: 1K 1/4W	14-5102
R9-12	Resistor: 2.2K 1/4W	14-5222
R13-16	Resistor: 1.3K 1/4W	14-5132
R17,19	Resistor: 43K 1/4W	14-5433
R18-20	Resistor: 30K 1/4W	14-5303
R21,22	Resistor: 180K 1/4W	14-5184
R23,24	Resistor: 240 Ohm 1/4W	14-5241

CX53 TRAKBALL

LOCATOR	DESCRIPTION	PART NUMBER
R25	Resistor: 4.7K 1/4W	14-5472
R30	Resistor: 100K 1/4W	14-5104
R31	Resistor 8.2K 1/4W	14-5822
R32-35	Resistor 430K 1/4W	14-5434
XA1,2,4,5	Socket I.C. 14 Pin	C014386-02
XA3	Socket I.C. 16 Pin	C014386-03
J2	Connector, Molex 5 Pin	C020463
U1,2	Optocoupler	C020290
Q1	Transistor, 2N3904	34-2N3904
	PCB	C020142
A1	I.C. LM339	C015950
A2	I.C. 4013	C014334
A3	I.C. 4538	C020478
A4	I.C. 4011	C014333
A5	I.C. 4030	C020477
	Cable Assy, 15-wire, 4-feet	**CA020338**

SECTION 8

ATARI CX5200 PARTS LIST

MAJOR ASSEMBLIES

LOCATION	DESCRIPTION	PART NO.
	ATARI VCS CX5200 (ORIGINAL 4-PORT) (Pkgd.)	CA018174-01
	ATARI VCS CX5200 (UNIVERSAL 4-PORT) (Pkgd.)	CA021450-XX
	PC Board Assy (Main) (ORIGINAL 4-PORT)	CA018087
	PC Board Assy (Main) (UNIVERSAL 4-PORT)	CA020108
	Heatsink Assy	CA019069
	Heatsink Assy (Universal)	CA020161
	RF Modulator "B" Assy	CA012174
	Cable Assy	CA018218
	Top Housing Assy (Original & Universal 4-Port)	CA018175-01
	Base Assy (Original & Universal 4-Port)	CA018176-01
	ATARI VCS CX5200 (Pkgd.) (2-PORT)	CA021452-XX
	PC Board Assy (Main) (2-Port)	CA021374
	Heatsink Assy	CA020161
	RF Modulator "B" Assy	CA012174
	Cable Assy	A003647
	PC Board Sub-Assy	CA021375
	Top Housing Assy (2-Port)	CA021587-01
	Base Assy (2-Port)	CA021588-XX
	ATARI CX522 SWITCH BOX ASSY (Pkgd.) (ORIGINAL AND UNIVERSAL 4-PORT)	CA020803-01
	ATARI SWITCH BOX ASSY (2-PORT)	CA018233-XX
	Balun Transformer	C018994
	ATARI CX52 CONTROLLER ASSY (Pkgd.) (ALL MODELS)	CA018107
	Flex Circuit & Key Pad Assy	CA018989
	Controller Cable Assy	CA018145
	Top Housing Assy	CA018223
	Pot & Arm Assy	CA018987
	Cable Pot Assy	CA018988

Changed by ECN #0036 6/21/83

LOCATION	DESCRIPTION	PART NO.
	CX521 AC/DC POWER ADAPTOR (Pkgd.) (ORIGINAL AND UNIVERSAL 4-PORT)	C018187
	AC/DC POWER ADAPTOR (Not Pkgd.) (ORIGINAL AND UNIVERSAL 4-PORT)	CA019141-XX
	A.C. ADAPTOR ASSY (2-PORT)(PKGD.)	CA021673-XX
	PC BOARD ASSY (MAIN) (ORIGINAL 4-PORT)	CA018087

NOTE: The Parts List for PC Board Assy (Main) Number CA020108 begins on page 8-5.
The Parts List for PC Board Assy (Main) Number CA021374 begins on page 8-8.

C1,2,5,7,8,15-17,21,23-29 34,47,60,73,86	Cap. Ceramic Axial .1uF (50V)	C014181-03
C3,4,6,12,18,22,36,49,50	Cap. Ceramic Axial .01uF (50V)	C014180-18
C9	Cap. Ceramic Axial 100pF (50V)	C014180-03
C10,31,33,55	Cap. Ceramic Axial 47pF (50V)	C014179-05
C11,20	Cap. Ceramic Axial 10pF (50V)	C014179-03
C13,14	Cap. Polystyrene 820pF (25V)	C018621
C19,99-106	Cap. Polyester Radial .047uF (100V)	C017518
C30,32	Cap. Ceramic Axial 68pF (50V)	C014179-12
C35	Cap. Ceramic Axial 22pF (50V)	C014179-01
C37,38,40,48,51-54,91-98, 107-110,124,126,131-135	Cap. Ceramic Axial .001uF (50V)	C014180-17
C41,42,119,144	Cap. Tantalum Axial 10uF (20V)	C017516
C43,44	Cap. Polyester Radial .22uF (100V)	C010394
C45	Cap. Elec Radial 4700uF (25V)	C016033
C56-59,61-72,74-85,87-90 112-115	Cap. Ceramic Axial 470pF (50V)	C014179-16
C111,117,118,120-122,125, 127,129,130,136	Cap. Ceramic Axial .1uF (50V)	C014181-03
C116	Cap. Ceramic Axial .22uF (50V)	C014181-05
C138,139,141-143	Cap. Ceramic Axial .1uF (50V)	C014181-03
C140	Cap. Ceramic Axial 33pF (50V)	C014179-04
R1	Resistor 1/4W 470K	14-5474
R2	Resistor 1/4W 100K	14-5104
R3	Resistor 1/4W 1 Meg	14-5105
R4-7,15,16,27,32,34-37, 47,55,56,60,69,124	Resistor 1/4W 4.7K	14-5472
R8	Resistor Variable 500K	19-411504
R9	Resistor 1/4W 91 Ohm	14-5910
R10,17 21,30,39,44,50 59,66,96,101	Resistor 1/4W 1K	14-5102
R11,14,68,131	Resistor 1/4W 220 Ohm	14-5221
R12,61	Resistor 1/4W 2.2K	14-5222
R13	Resistor 1/4W 240 Ohm	14-5241
R22,64	Resistor 1/4W 8.2K	14-5822
R23	Resistor 1/4W 82K	14-5823
R24	Resistor 1/4W 39K	14-5393
R25	Resistor 1/4W 20K	14-5203
R26,40	Resistor 1/4W 10K	14-5103
R28	Resistor 1/4W 3.3K	14-5332

LOCATION	DESCRIPTION	PART NO.
	PC BOARD ASSY (MAIN)(Continued) (ORIGINAL 4-PORT)	CA018087
R29,46	Resistor 1/4W 12K	14-5123
R31,43,65.125	Resistor 1/4W 6.8K	14-5682
R33	Resistor 1/4W 510 Ohm	14-5511
R41	Resistor 1/4W 18K	14-5183
R42	Resistor 1/4W 9.1K	14-5912
R45	Resistor 1/4W 15K	14-5153
R48,49	Resistor 1/4W 47K	14-5473
R51	Resistor 1/4W 10 Ohm	14-5100
R52	Resistor 1/4W 5.1K	14-5512
R53	Resistor 1/4W 56 Ohm	14-5560
R54	Resistor 1/4W 560 Ohm	14-5561
R57,58	Resistor 1W 330 Ohm (Metal Film)	C018188-02
R62,63	Resistor 1/4W 22K	14-5223
R67	Resistor 1/4W 150 Ohm	14-5151
R70-76,78-95,97-100, 102-105,114-121	Resistor 1/4W 470 Ohm	14-5471
R106-113	Resistor 1/4W 1.8K	14-5182
R122	Resistor 1/4W 22 Ohm	14-5220
R123	Resistor 1/4W 390 Ohm	14-5391
R126	Resistor 1/4W 1K (Metal Film)	C018974-01
R128	Resistor 1/4W 3.3K (Metal Film)	C018974-03
R129,133	Resistor 1/4W 680 Ohm	14-5681
R130	Resistor 1/4W 1.5K (Metal Film)	C018974-02
R132 (Alternate listed)	Resistor Variable 1K	C019103
R132 (Alternate for P/N C019103)	Resistor Variable 1K	C018975
U1	IC CD4050B (HEX CMOS Buffer)	C010816
U2	IC 6502 (Modified)	C014806
U3	IC ANTIC	C012296
U4,15	IC 74LS244	C014313
U5	IC GTIA	C014805
U6	IC 74LS139N	C018032
U7	IC POKEY	C012294
U8	IC ROM OS	C019156
U9-13	IC 4052 (Analog multiplexer)	C017950
U14,28	IC 74LS10	C014339
U16,17	IC 74LS258N	C019052
U18-25	IC RAM (16K X 1D Single Supply)	C018082
U27	IC 74LS00	C014341
U29	IC 4013B (Dual Type D Flip Flop)	C014334
CR1-4	Diode 1N914 31-1N914	
Q1,2,5,11,15	Transistor 2N3906	C018991
Q3,8-10,12-14	Transistor 2N3904	34-2N3904
Q4	Transistor 34-2N3563	34-2N3563
Q6,7	Transistor MJE210	C018094

Changed by ECN #0036 6/21/83

LOCATION	DESCRIPTION	PART NO.
Y1 (Alternate listed)	Crystal 3.579575 Mhz (HC-18)	C015510
Y1 (Alternate for P/N C015510)	Crystal 3.579575 Mhz	C010177
	PC BOARD ASSY (MAIN)(Continued) **(ORIGINAL 4-PORT)**	**CA018087**
L1	Inductor Variable (0.85-1.2uH)	C010823
L2	Inductor Axial 2uH	C010822
L3	Inductor Axial 4.7uH	C014804
L4-6	Inductor Axial 22uH	C014380
L8	Inductor Axial 2.7uH	C018189
L9,11-16,18	Inductor Ferrite Bead	C014384
DS1	LED	C014776
DS1 (Part of)	LED Standoff	C018143
VR1,2 (Part of)	Voltage Regulator 78M05 (5V)	C014348
S1	Switch Slide Channel Select	C012241
S2	Switch Momentary Push Button	C018093
J1	Connector Cartridge PC Board Mount (18/36)	C018081
J3	Connector Phono Jack	C018245
Port 1-4	Connector (15 pin)	C018013
X1,6,9-13,16-25	Socket IC (16 pin)	C014386-03
X2,3,5,7	Socket IC (40 pin)	C014386-09
X4,15	Socket IC (20 pin)	C014386-05
X8	Socket IC (24 pin)	C014386-07
X14,27-29	Socket IC (14 pin)	C014386-02
VR1,2	Heatsink/Regulator Assy	CA019069
VR1,2 (Part of)	Heatsink	C018140
	RF Modulator "B" Assy	CA012174
	Cable Assy	CA018218
	Shield Top	C019027
	Shield Bottom	C019028
	PC Board (J2 mounted on PC Board)	C018085

LOCATION	DESCRIPTION	PART NO.
	PC BOARD ASSY (MAIN) (UNIVERSAL 4-PORT)	**CA020108**
	5200 Universal PCB Assy	CA020108
	Heatsink Assembly	CA020161
	LED:DS1	C014776
	LED Standoff	C018143
	Shield Top	C019027
	Shield Bottom	C019028
A1	I.C. 4050B	C010816
A2	I.C. Custom 6502	C014806
A3	I.C. Custom ANTIC	C012296-XX
A5	I.C. Custom GTIA	C014805-XX
A6	I.C. 74LS139N	C0180323
A7	I.C. Custom POKEY	C012294
A8	I.C. ROM, O.S.	C019156
A9-13	I.C. Custom 4052, A9-13	C017950
A14	I.C. 74LS125	C016543
A15	I.C. 74LS51	C019671
A16,17	I.C. Custom 74LS258N	C019052
A18-25	I.C. 16Kx1D RAM Single Supply	C018082
A26	I.C. Custom 4013B	C014334
A27	I.C. Custom 74LS00	C014341
C1,2,7,8,15-17, 21,23-29,34,47,60 73,86,111,117,118, 121,122,125,127 129,130,136,137, 138,139,141,142, 143,147	Cap. Ceramic Axial 50V	C01481-03
C3,4,6,12,18,22 36,49,50	Cap. Ceramic Axial .01uF, 50V	C014180-18
C9	Cap. Ceramic Axial, 100pF, 50V	C014180-03
C10	Cap. Ceramic Axial, 47pF, 50V	C014179-05
C11,20	Cap. Ceramic Axial, 10pF, 50V	C014179-03
C13,14	Cap. Polystyrene Auto, Insertable, 820pF	C018261
C19,99-106	Cap. Polyester Radial, .047uF,100V	C017518
C30-33	Cap. Ceramic Axial, 39pF, 50V	C014179-23
C35	Cap. Ceramic Axial, 22pF, 50V	C014179-01
C37,38,40,48,51 52-54,91-98,107-110,124,126,131-135	Cap. Ceramic Axial, .0001uF, 50V	C014180-17
C39	Cap. Ceramic Axial 68pF, 50V	C014179-12
C41,42,119,144	Cap. Tantalum Axial 10uF, 20V	C017516
C43,44	Cap. Polyester Radial, .22uF, 100V	C010394
C45	Cap. Electrolytic Radial, 47uF, 25V	C020121
C55,145	Cap. Ceramic Axial, 390pF, 50V	C014179-24

Changed by ECN #0036 6/21/83

LOCATION	DESCRIPTION	PART NO.
	PC BOARD ASSY (MAIN) (Continued) **(UNIVERSAL 4-PORT)**	CA020108
C56-59,61-72,74-85	Cap. Ceramic Axial, 470pF, 50V	C014179-16
C116	Cap. Ceramic Axial, .22uF, 50V	C014181-05
C140	Cap. Ceramic Axial, 33pF, 50V	C014179-04
CR1-7,9-10	Diode: 1N914	31-1N914
J1	Cartridge PCB Mount: 18/36 Contacts	C018081
J3	Jack, Phono, RF Output, PC Mounted	C018245
	Connector 15 Pin "D" Sub Port 1-4	C018013
L1	Inductor Radial Variable: .85-1.2uH, 12.5 Turn	C010823
L2	Inductor Axial: 2uH	C010822
L3	Inductor Axial: 2.7uH	C017224
L4-6	Inductor Axial: 22uH	C014380
L7,9,10,12-15	Ferrite Bead	C014384
L8	Inductor Axial 2.7uH	C018189
Q1,2,5,11,15	Transistor Power PNP:MJE	33-2N3906
Q3,8-10,12-14	Transistor 2N3904	34-2N3904
Q4	Transistor 2N3563	34-2N3563
R1	Carbon Film Resistor 470K Ohm, 1/4W	14-5474
R2	Carbon Film Resistor 100K Ohm, 1/4W	14-5104
R3	Carbon Film Resistor 1 MEG Ohm,1/4W	14-5105
R4-7,15,16,27,32, 34-37,47,56,60, 124,136,55	Carbon Film Resistor 4.7K Ohm 1/4W	14-5472
R8	Resistor, Pot: 500K, 1/4W	19-411504
R10,17-21,30,39 44,59,66,96,50 101,140,141	Carbon Film Resistor 1K Ohm, 1/4W	14-5102
R11,14,68,131	Carbon Film Resistor 220 Ohm, 1/4W	14-5221
R12,61,69,135	Carbon Film Resistor 2.2K Ohm, 1/4W	14-5222
R13	Carbon Film Resistor 240 Ohm, 1/4W	14-5241
R22,64	Carbon Film Resistor 8.2K Ohm, 1/4W	14-5822
R23	Carbon Film Resistor 82K Ohm, 1/4W	14-5823
R24	Carbon Film Resistor 39K Ohm, 1/4W	14-5393
R25	Carbon Film Resistor 20K Ohm, 1/4W	14-5203
R26,40	Carbon Film Resistor 10K Ohm, 1/4W,	14-5103
R28,142	Carbon Film Resistor 3.3K Ohm, 1/4W	14-5332
R29, 46	Carbon Film Resistor 12K Ohm, 1/4W	14-5123
R31,43,65,125	Carbon Film Resistor 6.8K Ohm, 1/4W	14-5682
R41	Carbon Film Resistor 18K Ohm 1/4W,	14-5183
R42	Carbon Film Resistor 9.1K Ohm 1/4W,	14-5912
R45	Carbon Film Resistor 15K Ohm 1/4W	14-5153
R48,49	Carbon Film Resistor 47K Ohm 1/4W	14-5473
R51,137	Carbon Film Resistor 10 Ohm 1/4W,	14-5100
R52	Carbon Film Resistor 5.1K Ohm, 1/4W	14-5512
R53	Carbon Film Resistor 56 Ohm 1/4W	14-5560
R54	Carbon Film Resistor 560 Ohm, 1/4W	14-5561

LOCATION	DESCRIPTION	PART NUMBER
	PC BOARD ASSY (MAIN) (Continued) **(UNIVERSAL 4-PORT)**	**CA020108**
R57,58	Carbon Metal Film 182 Ohm, 1W	C018188-01
R62,63	Carbon Film Resistor 22K Ohm, 1/4W	14-5223
R67	Carbon Film Resistor 150 Ohm, 1/4W	14-5151
R70	Carbon Film Resistor 1.5K Ohm, 1/4W	14-5152
R71-76,78-95,97-100,102-105,114-121	Carbon Film Resistor 470 Ohm 1/4W	14-5471
R106-113	Carbon Film Resistor 1.8K Ohm, 1/4W	14-5182
R122	Carbon Film Resistor 22 Ohm, 1/4W	14-5220
R123	Carbon Film Resistor 390 Ohm, 1/4W	14-5391
R126	Carbon Metal Film 1K Ohm, 1/4W	C018974-01
R128	Carbon Metal Film 3.3K Ohm, 1/4W	C018974-03
R129	Carbon Film Resistor 680 Ohm, 1/4W	14-5681
R130	Carbon Metal Film 1.5K Ohm, 1/4W	C019874-02
R132	Resistor, Trim Pot: 1K Ohm	C019103-XX
R134	Carbon Film Resistor 100 Ohm, 1/4W	14-5101
S1	Switch, Slide: Chan. Sel. Side Arm	C012241
S2	Switch, SPDT, Momentary, Push Button ON/OFF	C018093-XX
U1	Modulator, RF "B"	CA012174
XA1,6,9-13,16,17,18-25	Socket I.C. 16 Pin	C014386-03
XA2,3,5,7	Socket I.C. 40 Pin	C014386-09
XA8	Socket I.C. 24 Pin	C014386-07
XA14,15,26,27	Socket I.C. 14 Pin	C014386-02
Y1	Crystal 3.579575 MHz	C010177-XX

Changed by
ECN #0036
6/21/83

LOCATION	DESCRIPTION	PART NUMBER
	PC BOARD ASSY (MAIN)(2-PORT)	**CA021374**
A1	I.C. 4050B	C010816
A2	I.C. Custom 6502	C014806
A3	I.C. Custom Antic	C012296-XX
A5	I.C. Custom GTIA	C014805-XX
A6	I.C. 74LS139N	C018032
A7	I.C. Custom POKEY	C012294
A8	I.C. ROM O.S.	C019156
A9-11	I.C. 4052	C017950
A14	I.C. 74LS125	C016543
A15	I.C. 74LS51	C019671
A16,17	I.C. 74LS258N	C019052
A18-25	I.C. RAM 16K X 1D Single Supply	C018082
A26	I.C. 4013B	C014334
A27	I.C. 74LS00	C014341
J2	Power Jack, Rt Angle	C014715
	Heatsink Assembly	CA020161
U1	Modulator, RF "B"	CA012174
R8	Resistor, POT, 500K, 1/4W	19-411504
R132	Resistor, Trim POT, 1K	C019103-XX
S1	Switch, Slide Channel Select Side Arm	C019702-XX
S2	Switch, SPDT, Mmntry Psh Btn, On/Off	C018093-XX
	Pop Rivets	C014796
	Shield Top	C019027
	Shield Bottom	C019028
C1,2,5,7,8,15-17, 21,23-29,34,47,60, 61,73,86,117,137,121, 122,125,127,129,130, 136,141,138,139,142, 143,147	Cap, Ceramic Axial, .1uf, 25V	C014181-03
C3,4,6,12,18,22,36, 49,50	Cap, Ceramic Axial, .01uf, 50V	C014180-18
C9	Cap, Ceramic Axial, 100pf, 50V	C014180-03
C10	Cap, Ceramic Axial, 47pf, 50V	C014179-05
C11,20	Cap, Ceramic Axial, 10pf, 50V	C014179-03
C13-14	Cap, Polystyrene Auto Insertable, 820pf, 25V	C018261
C19,99,100,105,106	Cap, Polyester Radial, .047uf, 100V	C017518
C30-33	Cap, Ceramic Axial, 39pf, 50V	C014179-23
C35	Cap, Ceramic Axial, 22pf, 50V	C014179-01
C37,38,40,48,51,54, 91,92,97,98,107, 112,124,126,131, 132,135	Cap, Ceramic Axial, .001uf, 50V	C014180-17

LOCATION	DESCRIPTION	PART NUMBER
	PCB SUB-ASSY (2-PORT)	CA021375
C39	Cap, Ceramic Axial, 68pf, 50V	C014179-12
C41,42,119,144	Cap, Tantalum Axial, 10uf	C017516
C43,44	Cap, Polyester Radial, .22uf, 100V	C010394
C45	Cap, Electrolytic Radial, 47uf, 25V	C020121
C56-59,69-72,74-77,87-90,110,115	Cap, Ceramic Axial, 470pf, 50V	C014179-16
C116	Cap, Ceramic Axial, .22uf, 50V	C014181-05
C140	Cap, Ceramic Axial, 33pf, 50V	C014179-04
C145,55	Cap, Ceramic Axial, 390pf, 50V	C014179-24
R1	Res., Carbon Film, 470K Ohm, 1/4W	14-5474
R2	Res., Carbon Film, 100K Ohm, 1/4W	14-5104
R3	Res., Carbon Film, 1 Meg Ohm, 1/4W	14-5105
R4-7,16,27,32,34-37,47,55,56,60,124,136	Res., Carbon Film, 4.7K Ohm, 1/4W	14-5472
R9	Res., Carbon Film, 91 Ohm, 1/4W	14-5910
R10,17-21,30,39 44,59,66,50,101 140,141	Res., Carbon Film, 1K Ohm, 1/4W	14-5102
R11,14,68,131	Res., Carbon Film, 220 Ohm, 1/4W	14-5221
R12,61,69,135	Res., Carbon Film, 2.2K Ohm, 1/4W	14-5222
R13	Res., Carbon Film, 240 Ohm, 1/4W	14-5241
R22,64	Res., Carbon Film, 8.2K Ohm, 1/4W	14-5822
R23	Res., Carbon Film, 82K Ohm, 1/4W	14-5823
R24	Res., Carbon Film, 39K Ohm, 1/4W	14-5393
R25	Res., Carbon Film, 20K Ohm, 1/4W	14-5203
R26,40	Res., Carbon Film, 10K Ohm, 1/4W	14-5103
R28,142	Res., Carbon Film, 3.3K Ohm, 1/4W	14-5332
R29,46	Res., Carbon Film, 12K Ohm, 1/4W	14-5123
R31,43,65,125	Res., Carbon Film, 6.8K Ohm, 1/4W	14-5682
R33	Res., Carbon Film, 510 Ohm, 1/4W	14-5511
R41	Res., Carbon Film, 18K Ohm, 1/4W	14-5183
R42	Res., Carbon Film, 9.1K Ohm, 1/4W	14-5912
R45	Res., Carbon Film, 15K Ohm, 1/4W	14-5153
R48,49	Res., Carbon Film, 47K Ohm, 1/4W	14-5473
R51,137	Res., Carbon Film, 10 Ohm, 1/4W	14-5100
R52	Res., Carbon Film, 5.1K Ohm, 1/4W	14-5512
R53	Res., Carbon Film, 56 Ohm, 1/4W	14-5560
R54	Res., Carbon Film, 560 Ohm, 1/4W	14-5561
R57,58	Res., Carbon Metal Film, 330 Ohm, 1W	C018188-02
R62,63	Res., Carbon Film, 22K Ohm, 1/4W	14-5223
R67	Res., Carbon Film, 150 Ohm, 1/4W	14-5151
R70	Res., Carbon Film, 1.5K Ohm, 1/4W	14-5152

Changed by
ECN #0036
6/21/83

LOCATION	DESCRIPTION	PART NUMBER
	PCB SUB-ASSY (2-PORT) (Continued)	CA021375
R71-74,80-84, 88-91,102-105, 114,117,118,121	Res., Carbon Film, 470 Ohm, 1/4W,	14-5471
R106,109,110,113	Res., Carbon Film, 1.8K Ohm, 1/4W	14-5182
R122	Res., Carbon Film, 22 Ohm, 1/4W	14-5220
R123	Res., Carbon Film, 390 Ohm, 1/4W	14-5391
R126	Res., Carbon Metal Film, 1K Ohm, 1/4W	C018974-01
R128	Res., Carbon Metal Film, 3.3K Ohm, 1/4W	C019874-03
R129	Res., Carbon Film, 680 Ohm, 1/4W	14-5681
R130	Res., Carbon Metal Film, 1.5K Ohm, 1/4W	C018974-02
R133,134	Res., Carbon Film, 100 Ohm, 1/4W	14-5101
J1	Cartridge, PCB Mnt, 18/36 Contacts	C018081
	Connector,15 Pin "D" Sub Port 1-2	C018013
Y1	Crystal,3.579575 MHz ± 120 HZ	C015510
CR1-10	Diode, 1N914	31-1N914
DS1	LED	C014776
	LED Standoff	C018143
L1	Inductor Radial Variable, .85-1.2uH 12.5 Turn	C010823
L2	Inductor Axial, 2uH	C010822
L3	Inductor Axial, 2.7uH	C017224
L4-6	Inductor Axial, 22uH	C014380
L9,7,12-15,10	Ferrite Bead	C014384
J3	Jack, Phono, RF Output, PC Mounted	79-5903
XA1,6,9-11,16,17, 18-25	Socket, I.C., 16 Pin	C014386-03
XA2,3,5,7	Socket, I.C., 40 Pin	C014386-09
XA8	Socket, I.C., 24 Pin	C014386-07
XA14,15,27,26	Socket, I.C., 14 Pin	C014386-02
Q1,2,5,11,15	Transistor, 2N3906	33-2N3906
Q3,8,9,10,12,13,14	Transistor, 2N3904	34-2N3904
Q4	Transistor, 2N3563	34-2N3563
Q6,7	Transistor Power PNP, MJE 210	C018094
	PCB	C021376

LOCATION	DESCRIPTION	PART NUMBER
	TOP HOUSING ASSY	**CA018175-01**
	(ORIGINAL AND UNIVERSAL 4-PORT)	
	Housing Top	C018131
	Button (Power ON/OFF)	C018137
	ATARI Logo Name Plate	C018141
	Spring (Power ON/OFF)	C018144
	Connector Cover	C018951
	TOP HOUSING ASSY(2-PORT)	**CA021587-01**
	Connector Cover	C021353
	Top Housing	CA021362
	Name Plate	C018141
	Button	C018137
	Spring	C018144
	BASE ASSY	**CA018176-01**
	(ORIGINAL AND UNIVERSAL 4-PORT)	
	Rubber Feet	88-1006
	Housing Bottom	C018132
	Cartridge Door Rear	C018139
	Housing Cord Wrap	C018218
	Cover Controller	C018952
	BASE ASSY(2-PORT)	**CA021588-XX**
	Bottom Housing	C018132
	Rubber Feet	88-1006
	Rear Cartridge Door	C018139
	Label, FCC	C019107
	ATARI VCS CX5200	**CA018174-01**
	ATARI CX52 CONTROLLER ASSY	**CA018107**
	(ALL MODELS)	
	Top Housing	C018108
	Bottom Housing	C018109
	Top Bezel	C018110
	Side Bezel	C018111
	Top Actuator Plate	C018112
	Bottom Actuator Plate	C018113
	Slide Block	C018114
	Boot	C018115
	Retaining Ring	C018116
	Pivot Shaft	C018120
	Knob	C018121
	Support Plate (Keyboard)	C018123
	Flex Circuit	C018124
	12 Key Switch Set	C018126
	2 Fire Button Switch Set	C020501
	Auxiliary Function Keys	C018128

Changed by
ECN #0036
6/21/83

LOCATION	DESCRIPTION	PART NO.
	Controller Cable Assy	CA018145
	Top Housing Assy	CA018223
	Pot & Arm Assy	CA018987
	Cable Pot Assy	CA018988
	TRAKBALL ASSY (CX53) (ALL MODELS)	**CA020194**
	Top Housing Assy	CA020197
	Bottom Housing Assy	CA020198
	Lower PCB Assy	CA020140
	Roller Shaft Assy	CA020583
	Cable Assy	CA020333
	Top Housing Assy	**CA020197**
	Top Housing	C020195
	Name Plate	C020193
	12-Key Switch Set	C018126
	Fire Button	C020192
	Auxiliary Function Keys	C018128
	Upper PCB Assy	CA020287
	Spring	C012951
	Bottom Housing Assy	**CA020198**
	Bottom Housing	C021096
	Roller Shaft Assy	CA020583
	Idler Shaft Assy	CA020582
	Ball, 2 1/4" Diameter	C020191
	Feet, rubber	88-1006
	Lower PCB Sub-Assy	CA020141
	Shaft, Roller	C020572
	Encoding Wheel	C020571
	Bearing	C020190
	Lower PCB Assy	**CA020140**
C1	Cap, Electrolytic Radial 10uf 16V	C014392
C2	Cap, Ceramic Axial .1uf 50V	C014180-19
C3,4	Cap, Ceramic Axial 470pf 50V	C014180-07
C5,6,7,8	Cap, Mylar Radial: .1uf, 100V	C017885
C9	Cap, Ceramic Axial: .01uf 50V	C014180-18
C10	Cap, Ceramic Axial: .22uf 50V	C014181-05
R1-4	Resistor: 3K 1/4W	14-5302
R5,6	Resistor: 12K, 1/4W	14-5123
R7,26-29	Resistor: 10K 1/4W	14-5471
R8	Resistor: 1K 1/4W	14-5102
R9-12	Resistor: 2.2K 1/4W	14-5222
R13-16	Resistor: 1.3K 1/4W	14-5132
R17,19	Resistor: 43K 1/4W	14-5433
R18-20	Resistor: 30K 1/4W	14-5303
R21,22	Resistor: 180K 1/4W	14-5184
R23,24	Resistor: 240 Ohm 1/4W	14-5241

SECTION 9

SERVICE BULLETINS

This section is to be used by you to file the three classifications of service bulletins that are periodically released by the Director of Technical Support.

The following are brief descriptions of each classification:

FIELD CHANGE ORDER

A Field Change Order describes mandatory hardware or software changes to ATARI Computer products and instructs how to implement these changes. The changes must be performed on all units serviced or repaired.

UPGRADE BULLETIN

An Upgrade Bulletin describes product improvements or modifications that the consumer may wish to purchase. These bulletins allow you to modify the customer's unit to add capabilities which may not have been available when the unit was originally manufactured.

TECH TIP

A Tech Tip is a document of a general nature which transmits routine service or repair information. By communicating methods developed since you attended training classes, Tech Tips aid to continuously improve repair skills and increase knowledge of ATARI Computer Products.

Other times, Tech Tips alert you to units that have been modified and are now standard for ATARI Manufacturing, but are different from many existing units and require different repair techniques.